City of Bradenton, Florida

City Council Agenda Memorandum

Agenda Item:	SU.16.4644 Williams Dock	**Agenda Date:**	January 11, 2017
Originated by:	Myra Schwarz, Senior Planner	**Agenda Placement:**	Public Hearing
Authorized by:	Catherine Hartley, AICP, CNU-a		

Explanation

SU.16.4644, WARD 2, NEIGHBORHOOD 12.02

Request by Brian Wood Contracting, Inc. dba Wood Dock and Seawall, agent, for John M. Williams, owner, for a Special Use Permit to construct a 493-foot long, 1,980 square foot dock with a pier and two boat lifts, into the Manatee River, for the property located at 3404 Riverview Blvd, zoned R-1, Residential Single-family; Parcel Identification Number: 3547000559.

Financial Impact

N/A

Requested action to be taken by Council

Approval of SU.16.4644 with 2 stipulations.

Staff Recommendation

Approval of SU.16.4644 with 2 stipulations.

Attachments

Staff Report

PCD STAFF REPORT

Department of Planning & Community Development

PROJECT:	**SU.16.4644 Williams**
TO:	City Council
FROM:	Myra Schwarz, Senior Planner
DATE:	January 11, 2017
APPLICANT:	Brian Wood Contracting dba Wood Dock and Seawall, agent; John M. Williams, owner
WARD:	2 – Gene Brown

PROJECT SYNOPSIS:

Applicant's Request:	*Special Use Permit for Dock into Manatee River*
Location:	*3404 Riverview Blvd (Zoned R-1)*
DRC Recommendation:	*Forward to Public Hearing*
Staff Recommendation:	*Approval with 2 stipulations*
Planning Commission Recommendation:	*Recommend Approval with 2 Stipulations – December 21, 2016*
City Council Action:	*TBD – January 11, 2017*

SPECIAL USE PERMIT REQUEST:

The applicant is requesting approval to construct a dock that is ±493 feet in length and ±1,980 square feet in area, that will originate on the applicant's property located at 3404 Riverview Blvd and extend into the Manatee River. A Special Use is required because the requested length of the dock exceeds the maximum 80 foot length permitted by right by the Land Use Regulations (Chapter 5.1.2.14.d.iv.)

The applicant also proposes to add two boat lifts and a 10' x 18' terminal pier to the dock.

FINDINGS OF FACT

LOCATION OF SUBJECT PROPERTY:
3404 Riverview Blvd, Parcel ID #3547000559. The subject property is located in Neighborhood 12.02.

CHARACTERISTICS OF THE SUBJECT PROPERTY: The property possesses a single-family residence, and is a waterfront property with a rear yard shoreline on the Manatee River. The subject property is the result of multiple lot splits that include a subdivision (SF.05.0003) and is Lot 1 of a 2-lot subdivision, Heathers' Landing.

FUTURE LAND USE/ ZONING: Residential Low (6 du/acre)/ R-1 Residential Single Family

FLOOD ZONE: The rear waterfront portion **(**± 45 feet) of the property lies within AE, BFE 7.

HISTORY/PREVIOUS ACTION RELEVANT TO APPLICANT'S REQUEST: None

SURROUNDING USES AND DESIGNATIONS:

Existing: Manatee River **Zoning:** NA **FLU:** NA	**Existing:** Manatee River **Zoning:** NA **FLU:** NA	**Existing:** Manatee River **Zoning:** NA **FLU:** NA
Existing: Single Family Residential **Zoning:** R-1 **FLU:** Res Low	**SUBJECT PROPERTY**	**Existing:** Single Family Residential **Zoning:** R-1 **FLU:** Res Low
Existing: Single Family Residential **Zoning:** R-1 **FLU:** Res Low	**Existing:** Single Family Residential **Zoning:** R-1 **FLU:** Res Low	**Existing:** Single Family Residential **Zoning:** R-1 **FLU:** Res Low

ANALYSIS

REQUIRED FINDINGS FOR SU.16.4644:

1. **Adequacy of ingress and egress to property and proposed structures with particular regard for automobiles and pedestrian safety and convenience, traffic generation, flow and control, and emergency access.**

   The dock site is at the rear yard of the subject property and is a private family dock. Emergency access to the subject property is via Riverview Blvd.

2. **Location and design of off-street parking and loading areas in regard to the items in 1, above, and the smoke, noise, glare, dust, vibrations, fumes, pollution, and other effects of the use on adjoining properties.**

   The dock is for private use accessory to the subject property's residence. There will be no generation of noise, glare, fumes, or other effects to neighboring properties.

3. **Location and design of refuse and service areas in regard to availability, adequacy, and effect upon surrounding properties.**

   The subject site is a private residence. Any refuse will be managed at the residence, and no service areas exist on the site.

4. **Utilities, in regard to location, availability, adequacy, and compatibility with surrounding properties.**

   Electric service to power boat lifts will be private and included in the permit review process.

5. **Screening, buffering, or separation of any nuisance or hazardous feature of the use.**

There will be no nuisance or hazardous features that will require buffering from adjacent properties.

6. **Proposed signs and exterior lighting with reference to glare, traffic safety and compatibility, and harmony with surrounding properties.**

   There are no signs proposed and lighting would be limited to minimal lighting required to safely use the dock at night. Any lighting must be switched either automatically or manually so that there would be no lights on continuously. In order to meet this criterion, the following stipulation needs to be required:

   - *Lighting must include a manual or automatic switch to prevent lights from continuous operation.*

7. **Effect upon the value of surrounding properties; the use shall not hinder the development of nearby vacant properties, or adversely affect their economic value.**

   The dock will enhance the property values of existing adjacent properties and add value to the owner's property. The dock must be kept in good working order and condition to not degrade the value of nearby properties. In order to meet this criterion, the following stipulation needs to be required:

   - *The dock must be kept in good working order and condition to not degrade the value of nearby properties.*

8. **Adequacy of land and/or building, which are to be used.**

   The land is a sovereignty submerged land, and is subject to approval and permission of use by Board of Trustees of the Internal Improvement Trust Fund. A Letter of Consent is included with the FDEP exemption documentation.

9. **General compatibility or appropriateness with adjacent properties and other property in the district with special consideration given to the proposed hours of operation.**

   The proposed dock is similar in dimension and character to surrounding docks, for private recreational boating and water enjoyment.

10. **Environmental quality of the district in which the use is proposed and the effect the special exception might have on such quality.**

    The dock will be constructed to meet all requirements of the Department of Environmental Protection and the Army Corps of Engineers. The use of a boat lift will protect the waters from harmful paints and materials. The pilings will be installed in such a way as to provide minimal impact to the environment. The length of the dock is the minimum required to access navigable waters. The dock will be elevated in such a way as to accommodate the mean high water and seagrass for the extended length of the dock.

11. **Consistency with the City of Bradenton Comprehensive Plan.**

The proposed dock adheres to Goal 5 of the Coastal Management and Conservation Element, Responsible Use of Coastal Areas. "Use of coastal areas in a way which preserves natural systems…" The proposed dock is of minimum size to access navigable waterways, and no seagrass will be impacted by the installation of the dock, pier and boat lifts.

SUMMARY OF OUTSIDE AGENCY/PUBLIC NOTIFICATION RESPONSE:

The applicant provided the required permits from the Florida Department of Environmental Protection (FDEP) dated April 15, 2016, valid for five years, and the Army Corps of Engineers, dated October 5, 2016, valid through March 22, 2018. Consent by Rule, for use of the State of Florida's Sovereign Submerged lands, is included within the FDEP approval letter.

PCD STAFF EVALUATION:

The subject property is waterfront to the Manatee River west of the mouth of Ware's Creek. This particular stretch of shoreline is characterized by wide sand shallows, where the river bottom tends to be exposed at low tide. The exposed shallows at the subject property's shoreline extend approximately 250 feet, according to Manatee County bathymetry (water depth) data. A dock of the required maximum of 80 feet would fall within the shallows at the subject location, so the extended length of the proposed dock is necessary in order to reach navigable waters. (See Exhibit "A".) Vicinity docks vary in length, from 500 feet to 30 feet, depending upon the characteristics of the shallows and river bottom. The requested 493 feet is not unreasonable, and is compatible with neighboring docks.

The proposed dock exceeds the 80 foot maximum length requirement; therefore a Special Use Permit is required:

Land Use Regulations Chapter 2.2.1 ZONING PERMIT. *Docks and piers not meeting the criteria in Subsection 5.1.2.14 shall require Special Use approval prior to the processing of a Zoning Permit.*

Land Use Regulations Chapter 5.1.2.14 d.iv. *In a public waterway, the maximum length of any dock shall not exceed 80 feet or 25 percent of the width of the waterway or closer than 25 feet to the center of any public channel, whichever is less.*

All other dock dimensions, including side setbacks, are compliant both with Land Use Regulations and FDEP requirements. The request includes two boat lifts, two tie-off pilings, and a terminal pier at the end of the dock, all of which are within allowed side setbacks.

The dock is to be vertically ramped to accommodate changes in seagrass and mean high water.

ATTACHMENTS:

Maps and Exhibits
Mailing Notification List
Application
Deed
Letter of Request and Review Criteria
FDEP Approval Letter
ACOE Approval Letter
Survey
Site Plan

STAFF RECOMMENDATION:

APPROVAL of SU.16.4644 with the following stipulations:

1. The dock must be kept in good working order and condition, to not degrade from the value of nearby properties.

2. Lighting must include a manual or automatic switch to prevent lights from continuous operation.

PLANNING COMMISSION RECOMMENDATION (December 21, 2016):
APPROVAL (5-0) of SU.16.4644 with the following stipulations:

3. The dock must be kept in good working order and condition, to not degrade from the value of nearby properties.

4. Lighting must include a manual or automatic switch to prevent lights from continuous operation.

CITY COUNCIL ACTION (TBD January 11, 2017):

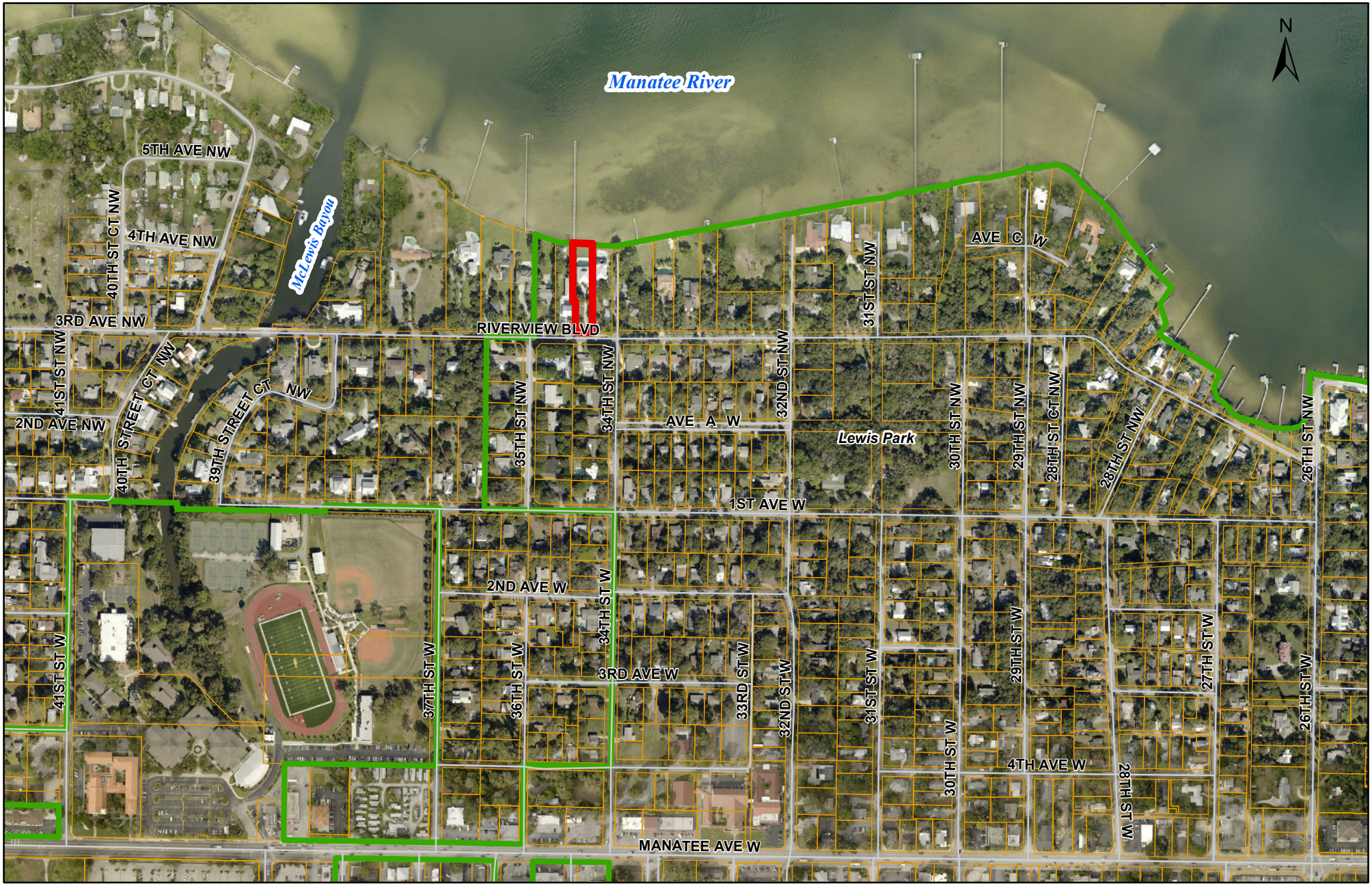

Application #: SU.16.4644
Owner: John Williams
Agent: Brian Wood Dock & Seawall
Address: 3404 Riverview Blvd
PIN: 3547000559

Prepared by Department of
Planning and Community Development

WILLIAMS DOCK LOCATION MAP

0 375 750 Feet

Legend

- Subject Parcel
- City Limits
- Parcels

Printed: 12/6/2016 1:16:42 PM
Path: G:\GIS\MXDs\PH_Maps\SU 16 4644 Williams Dock 3404 Riverview Blvd.mxd
GIS Data: Manatee County GIS, City of Bradenton

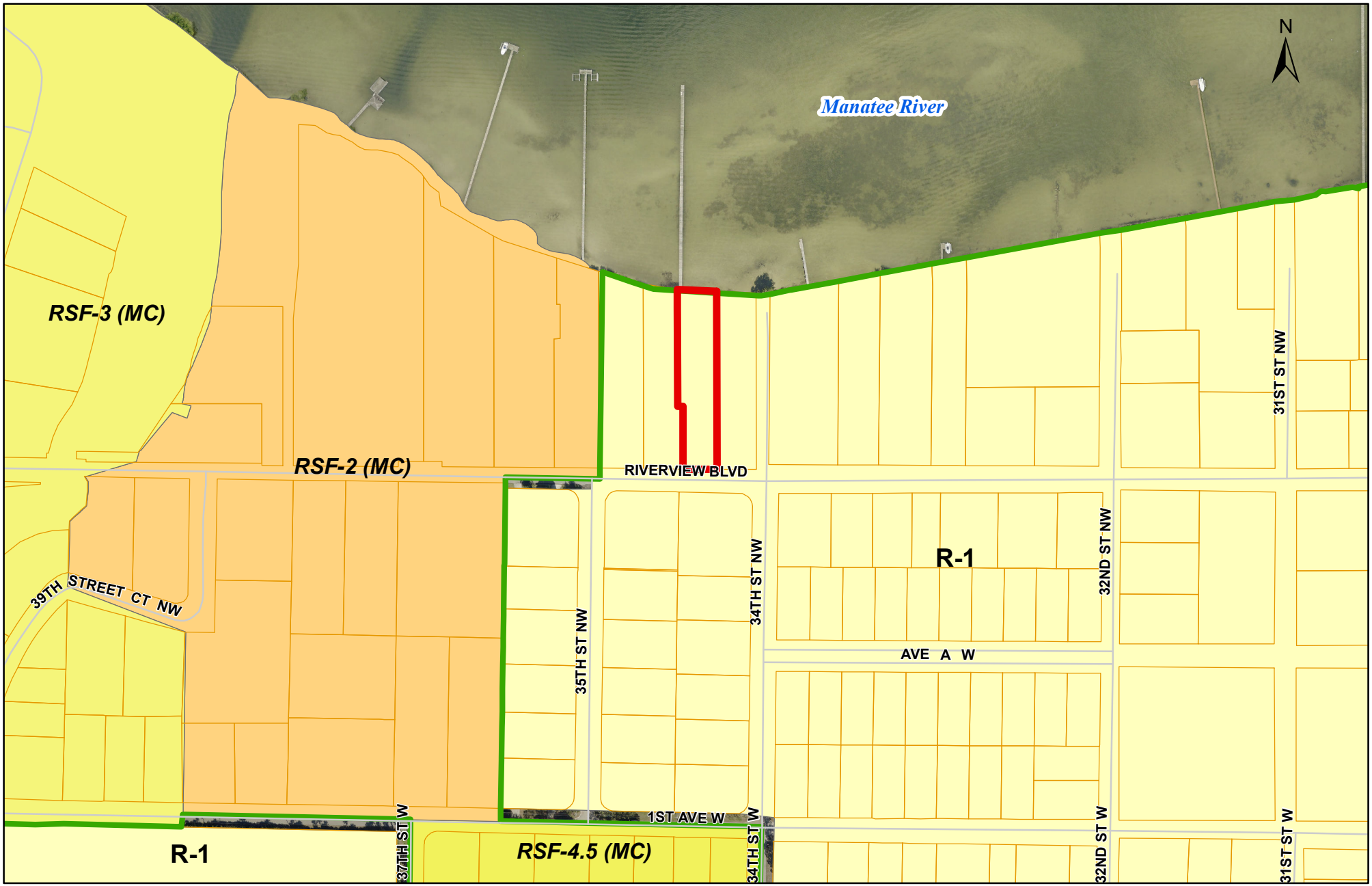

Application #: SU.16.4644
Owner: John Williams
Agent: Brian Wood Dock & Seawall
Address: 3404 Riverview Blvd
PIN: 3547000559

Prepared by Department of
Planning and Community Development

WILLIAMS DOCK
ZONING MAP

0 200 400 Feet

Legend
- Subject Parcel
- City Limits
- Parcels

Printed: 11/30/2016 1:15:52 PM
Path: G:\GIS\MXDs\PH_Maps\SU 16 4644 Williams Dock 3404 Riverview Blvd.mxd
GIS Data: Manatee County GIS, City of Bradenton

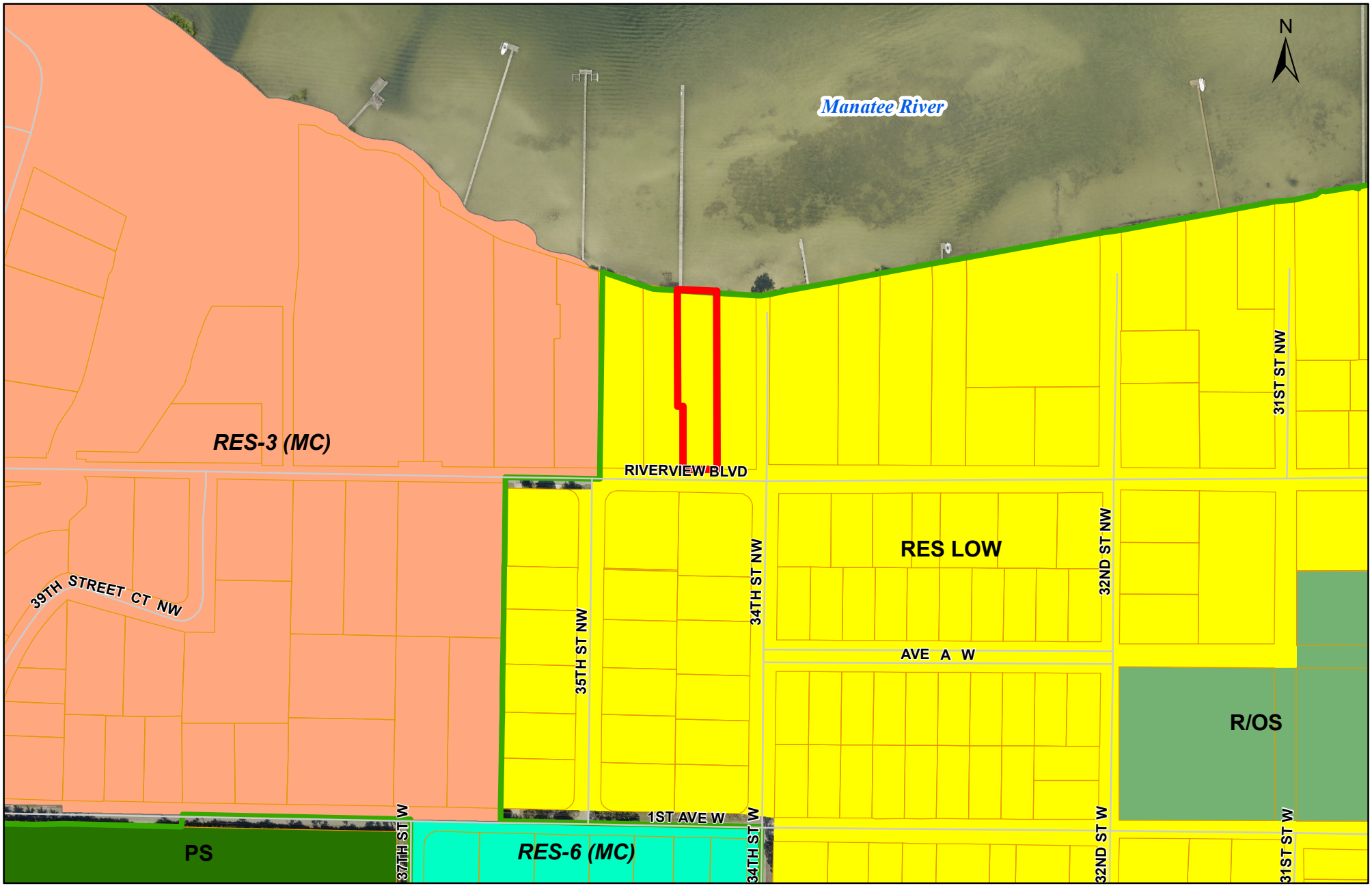

Application #: SU.16.4644
Owner: John Williams
Agent: Brian Wood Dock & Seawall
Address: 3404 Riverview Blvd
PIN: 3547000559

Prepared by Department of
Planning and Community Development

WILLIAMS DOCK
FUTURE LAND USE MAP

0 200 400 Feet

Legend
- Subject Parcel
- City Limits
- Parcels

Printed: 11/30/2016 1:12:07 PM
Path: G:\GIS\MXDs\PH_Maps\SU 16 4644 Williams Dock 3404 Riverview Blvd.mxd
GIS Data: Manatee County GIS, City of Bradenton

SU.16.4644 Williams Dock
Sand Shallows
Exhibit "A"
N
493 feet
395 feet
80 feet
RIVERVIEW BLVD
32 ST NW

HEATHER'S LANDING SUBDIVISION

A REPLAT OF A PORTION OF LOT 1, WARNER'S PLAT, AS PER PLAT THEREOF RECORDED IN PLAT BOOK 1, PAGE 131, LYING AND BEING IN SECTION 28, TOWNSHIP 34 SOUTH, RANGE 17 EAST, COUNTY OF MANATEE, STATE OF FLORIDA.

PLAT BOOK 46, PAGE 102
SHEET 1 OF 1 SHEETS

FILED AND RECORDED
6/9/2005 @ 1:53pm
R. B. SHORE, CLERK
MANATEE COUNTY, FLA.

2146077

"NOTICE: THIS PLAT, AS RECORDED IN ITS GRAPHIC FORM, IS THE OFFICIAL DEPICTION OF THE SUBDIVIDED LANDS DESCRIBED HEREIN AND WILL IN NO CIRCUMSTANCES BE SUPPLANTED IN AUTHORITY BY ANY OTHER GRAPHIC OR DIGITAL FORM OF THE PLAT. THERE MAY BE ADDITIONAL RESTRICTIONS THAT ARE NOT RECORDED ON THIS PLAT THAT MAY BE FOUND IN THE PUBLIC RECORDS OF THIS COUNTY."

LEGAL DESCRIPTION

A PORTION OF LOT 1, WARNER'S PLAT, ACCORDING TO THE PLAT THEREOF RECORDED IN PLAT BOOK 1, PAGE 131, OF THE PUBLIC RECORDS OF MANATEE COUNTY, FLORIDA BEING MORE PARTICULARLY DESCRIBED AS FOLLOWS:

BEGIN AT THE SOUTHEAST CORNER OF SAID LOT 1, WARNER'S PLAT; THENCE WEST, ALONG THE SOUTH LINE OF SAID LOT 1, ALSO BEING THE NORTH RIGHT-OF-WAY LINE OF RIVERVIEW BOULEVARD, A DISTANCE OF 140.00 FEET; THENCE N00°13'55"W, 120.00 FEET; THENCE WEST, 10.00 FEET; THENCE N00°13'55"W, 221.84 FEET TO A POINT ON THE NORTH LINE OF SAID LOT 1, SAID POINT BEING ON THE FACE OF AN EXISTING SEAWALL AND BEING THE MEAN HIGH WATER LINE OF THE MANATEE RIVER; THENCE S87°44'12"E, ALONG SAID FACE AND SAID MEAN HIGH WATER LINE, ALSO BEING THE NORTH LINE OF SAID LOT 1, A DISTANCE OF 150.14 FEET TO THE NORTHEAST CORNER OF SAID LOT 1, THENCE S00°13'55"E, ALONG THE EAST LINE OF SAID LOT 1, ALSO BEING THE WEST RIGHT-OF-WAY LINE OF 34th STREET WEST, A DISTANCE OF 335.91 FEET TO THE POINT OF BEGINNING.

CONTAINING 1.14 ACRES, MORE OR LESS.

RESERVATION OF EASEMENTS

THERE ARE HEREBY EXPRESSLY RESERVED, EASEMENTS OF FIVE (5) FEET IN WIDTH, ALONG ALL SIDE LOT LINES, AND TEN (10) FEET IN WIDTH ALONG ALL FRONT AND REAR LOT LINES FOR THE EXPRESS PURPOSE OF ACCOMMODATING SURFACE AND UNDERGROUND DRAINAGE AND OVERHEAD AND UNDERGROUND UTILITIES. SUCH EASEMENTS SHALL ALSO BE EASEMENTS FOR THE CONSTRUCTION, INSTALLATION, MAINTENANCE, AND OPERATION OF CABLE TELEVISION SERVICES, PROVIDED, HOWEVER, NO SUCH CONSTRUCTION, INSTALLATION, MAINTENANCE AND OPERATION OF CABLE TELEVISION SERVICES SHALL INTERFERE WITH THE FACILITIES AND SERVICES OF AN ELECTRIC, TELEPHONE, GAS OR OTHER PUBLIC UTILITY. WHERE MORE THAN ONE LOT IS INTENDED AS A BUILDING SITE, THE OUTSIDE BOUNDARIES OF SAID BUILDING SITE SHALL CARRY SAID EASEMENTS. WHERE SAID LOTS ARE COMBINED, THE UTILITY SHALL BE REIMBURSED FOR ANY RELOCATION OF SAID FACILITIES AFFECTED BY THE COMBINING OF SAID LOTS. ALL OTHER EASEMENTS SHOWN ON THIS PLAT ARE HEREBY RESERVED IN PERPETUITY FOR THE PURPOSES NOTED.

CERTIFICATE OF OWNERSHIP AND DEDICATION

I, WILLIAM L. MANFULL, AS PRESIDENT OF MANATEE RIVER COMMUNITY DEVELOPMENT CORPORATION, A FLORIDA CORPORATION, CERTIFY OWNERSHIP BY SAID CORPORATION OF THE PROPERTY DESCRIBED HEREON AND HEREBY DEDICATE ALL EASEMENTS, SHOWN OR DESCRIBED ON THIS PLAT, ENTITLED "HEATHER'S LANDING SUBDIVISION", UNLESS SPECIFICALLY RESERVED, FOR USE BY THE GENERAL PUBLIC FOREVER.

IN WITNESS WHEREOF, I, WILLIAM L. MANFULL, HAVE HEREUNTO SET MY HAND AND AFFIXED THE SEAL OF THE CORPORATION THIS 18th DAY OF April, 2005.

BY: MANATEE RIVER COMMUNITY DEVELOPMENT CORPORATION

WILLIAM L. MANFULL, AS PRESIDENT

WITNESSES:

SIGNATURE — SHAWN BURKHOLDER PRINTED NAME

Claudia Cahill — CLAUDIA CAHILL
SIGNATURE — PRINTED NAME

ACKNOWLEDGMENTS

STATE OF Florida :
SS
COUNTY OF Manatee :

THE FOREGOING INSTRUMENT WAS ACKNOWLEDGED BEFORE ME THIS 18th DAY OF April, 2005, BY WILLIAM L. MANFULL WHO IS PERSONALLY KNOWN TO ME OR WHO HAS PRODUCED AS IDENTIFICATION.

(SEAL)

Gail H. Coleman — Gail H. Coleman
NOTARY PUBLIC — PRINTED NAME

GAIL H. COLEMAN
MY COMMISSION # DD 306681
EXPIRES: July 9, 2008
Bonded Thru Budget Notary Services

CERTIFICATE OF REVIEWING SURVEYOR

I, THE UNDERSIGNED PROFESSIONAL SURVEYOR AND MAPPER, HEREBY CERTIFY THAT THIS PLAT HAS BEEN REVIEWED FOR CONFORMITY WITH THE REQUIREMENTS OF CHAPTER 177 OF THE FLORIDA STATUTES.

GERALD D. STROOP, PSM #4878
FOR THE CITY OF BRADENTON

DATE: 4/13/05

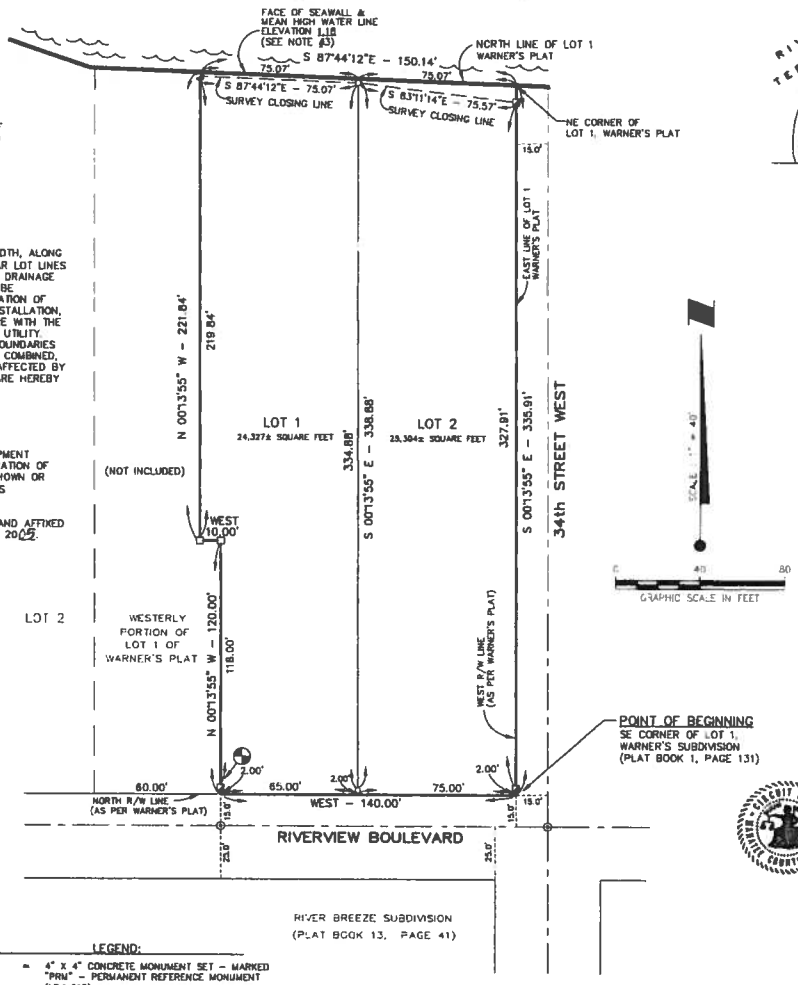

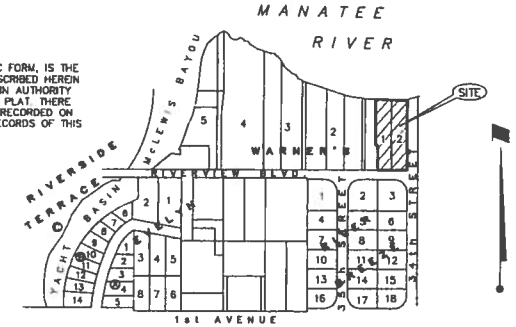

LOCATION SKETCH
SCALE: 1" = 400'

CERTIFICATE OF APPROVAL OF THE CITY OF BRADENTON

STATE OF FLORIDA :
SS
COUNTY OF MANATEE :

IT IS HEREBY CERTIFIED THAT THIS PLAT HAS BEEN OFFICIALLY APPROVED FOR RECORD AND ALL OFFERS OF DEDICATION ACCEPTED BY THE COUNCIL OF THE CITY OF BRADENTON, FLORIDA, THIS 2nd DAY OF June, 2005.

MAYOR OF THE CITY OF BRADENTON

ATTEST:

CITY CLERK AND TREASURER

CITY OF BRADENTON INCORPORATED 1903 FLORIDA

CERTIFICATE OF THE DIRECTOR OF PUBLIC WORKS

STATE OF FLORIDA :
SS
COUNTY OF MANATEE :

IT IS HEREBY CERTIFIED THAT ALL THE REQUIRED IMPROVEMENTS HAVE BEEN INSTALLED OR BONDED IN ACCORDANCE WITH THE REGULATIONS FOR THIS PROJECT, THIS 1st DAY OF June, 2005

DIRECTOR OF PUBLIC WORKS
DATE: 6-1-05

CERTIFICATE OF THE CLERK OF THE CIRCUIT COURT

STATE OF FLORIDA :
SS
COUNTY OF MANATEE :

I, R.B. SHORE, CLERK OF THE CIRCUIT COURT OF MANATEE COUNTY, FLORIDA, HEREBY CERTIFY THAT THIS PLAT HAS BEEN EXAMINED AND THAT IT COMPLIES IN FORM WITH ALL THE REQUIREMENTS OF THE STATUTES OF FLORIDA PERTAINING TO MAPS AND PLATS, AND THAT THIS PLAT HAS BEEN FILED FOR RECORD IN PLAT BOOK 46, PAGES 102, PUBLIC RECORDS OF MANATEE COUNTY, FLORIDA, THIS 9th DAY OF June, 2005.

CLERK OF THE CIRCUIT COURT, MANATEE COUNTY, FLORIDA (SEAL)

R.B. SHORE CLERK OF THE CIRCUIT COURT MANATEE COUNTY, FLORIDA

CERTIFICATE OF SURVEYOR

I THE UNDERSIGNED PROFESSIONAL SURVEYOR AND MAPPER, HEREBY CERTIFY THAT THIS PLAT IS A TRUE AND CORRECT REPRESENTATION OF THE LANDS SURVEYED, THAT THE SURVEY WAS MADE UNDER MY RESPONSIBLE DIRECTION AND SUPERVISION, THAT THE SURVEY DATA COMPLIES WITH ALL REQUIREMENTS OF CHAPTER 177, FLORIDA STATUTES AND THE CITY OF BRADENTON LAND USE REGULATIONS AND THAT THE PERMANENT REFERENCE MONUMENTS AND LOT CORNERS HAVE BEEN INSTALLED.

LEO MILLS, JR.
PROFESSIONAL SURVEYOR AND MAPPER
FLORIDA CERTIFICATE NO. 3513

4/18/05 (SURVEYOR'S SEAL)
DATE OF CERTIFICATION:

LEGEND:

- □ = 4" x 4" CONCRETE MONUMENT SET - MARKED "PRM" - PERMANENT REFERENCE MONUMENT (LB# 613)
- ◪ = 4" x 4" CONCRETE MONUMENT SET - MARKED "OFFSET PRM" (OFFSET PERMANENT REFERENCE MONUMENT (LB#613)
- ⊕ = CONTROL POINT - NAIL & TAB SET IN ASPHALT (LB# 613)
- ○ = 1/2" IRON ROD SET (WITNESS MONUMENT) (LB#613)
- LB # = LICENSED BUSINESS NUMBER
- R/W = RIGHT-OF-WAY
- ◐ = BENCH MARK: TOP OF CONCRETE MONUMENT - ELEVATION 11.01 FEET

SOURCE BENCH MARK: TOP OF CONCRETE MONUMENT (PRM) AT THE SOUTHEAST CORNER OF LOT 1, RIVER WEST SUBDIVISION (PLAT BOOK 40, PAGE 120): ELEVATION = 12.21.

NOTES:

1. BEARINGS SHOWN HEREON REFER TO THE NORTH RIGHT-OF-WAY LINE OF RIVERVIEW BOULEVARD BEING ASSUMED AS "WEST"
2. ELEVATIONS SHOWN HEREON REFER TO NATIONAL GEODETIC VERTICAL DATUM 1929 AND ARE UNDERLINED.
3. THE MEAN HIGH WATER LINE ELEVATION 1.18 AS LOCATED AND SHOWN HEREON WAS INTERPOLATED BETWEEN TIDE STATION AT DESOTO NATIONAL MEMORIAL (ELEVATION 1.16) AND TIDE STATION AT THE DESOTO BRIDGE (ELEVATION 1.21).

Leo Mills & Associates, Inc.
LICENSED BUSINESS #613
SURVEYING - LAND PLANNING
620 8TH AVENUE PALMETTO, FL. 34221
22 NORTH POLK AVENUE ARCADIA, FL. 34266

DWG. FILE: A:\ACAD\SUBDIV\SHEATHER\HEATHER.DWG
DATE DRAWN: 4/17/05 JOB NO. 04524
REVISIONS: 4/11/05

ADAIR,STEPHEN ANDREWS
3501 RIVERVIEW BLVD
BRADENTON, FL 34205

ALLEN,MICHAEL J
3405 RIVERVIEW BLVD
BRADENTON, FL 34205

BELKNAP,WILLIAM C
3601 RIVERVIEW BLVD
BRADENTON, FL 34205

CAVALLUZZI,LAWRENCE
543 HILLCREST DR
BRADENTON, FL 34209

GIROUX,PETER R
3700 1ST AVE W
BRADENTON, FL 34205

GRIFFITH,O M
3320 RIVERVIEW BLVD
BRADENTON, FL 34205

JORDAN,HERBERT TERRELL
206 34TH ST NW
BRADENTON, FL 34205

KOVAL,RONALD J
3410 RIVERVIEW BLVD
BRADENTON, FL 34205

MATHIS,JERRY
3309 RIVERVIEW BLVD
BRADENTON, FL 34205

MCCARDLE,ROBERT L
3311 RIVERVIEW BLVD
BRADENTON, FL 34205

MCCARTHY,MICHELLE ELIZABETH
3315 RIVERVIEW BLVD
BRADENTON, FL 34205

MCCLURE,JULIA G
202 35TH ST NW
BRADENTON, FL 34205

MILLS,CHARLES J JR
201 35TH ST NW
BRADENTON, FL 34205

MILLS,TRACEY LYNN
3401 RIVERVIEW BLVD
BRADENTON, FL 34205

MORRISH,JAMES A JR
3504 RIVERVIEW BLVD
BRADENTON, FL 34205

MORRISH,THOMAS N
3500 RIVERVIEW BLVD
BRADENTON, FL 34205

NEWHALL,JOSEPH F JR
3304 RIVERVIEW BLVD
BRADENTON, FL 34205

NICKS,CHARLES B JR
3406 RIVERVIEW BLVD
BRADENTON, FL 34205

RHODES,STEVEN C
202 34TH ST NW
BRADENTON, FL 34205

SCHELL,MERIDETH A
PMB 22784 PO BOX 2428
PENSACOLA, FL 32513

SOUTHWICK,MICHAEL C
400 20TH PL N
BRADENTON BEACH, FL 34217

SZYMANSKI,CONRAD D
3506 RIVERVIEW BLVD
BRADENTON, FL 34205

T D & G BLOCK INVESTMENT COMPANY LP
3310 RIVERVIEW BLVD
BRADENTON, FL 34205

THOMAS,CHARLES W
15911 STURTEVANT AVE
STANWOOD, WA 98292

WILLIAMS,BETTY U REV LIV TRUST
205 35TH ST NW
BRADENTON, FL 34205

WILLIAMS,JOHN M
3404 RIVERVIEW BLVD
BRADENTON, FL 34205

Special Use Application

Department of Planning & Community Development
101 Old Main Street, Bradenton, FL 34205
Ph: (941) 932-9400
www.cityofbradenton.com

bradenton
The Friendly City

CONTACT INFORMATION (REQUIRED)

Name of Property Owner: JOHN M. WILLIAMS

Owner Address: 3404 RIVERVIEW BLVD., BRADENTON, FL 34205 Telephone: 941.518.7032

Name of Agent: BRIAN WOOD CONTRACTING, INC. dba WOOD DOCK & SEAWALL

Agent Address: PO BOX 489 CORTEZ FL 34215 Telephone: 941.792.5322

Owner/Agent Email: WOODDOCKANDSEAWALL@MSN.COM

PROPERTY INFORMATION (REQUIRED)

Property Address: 3404 RIVERVIEW BLVD. BRADENTON, FL 34205

Parcel ID: 3547000559 Acreage: .5585

Zoning District: ~~XXXX~~ R-1 Future Land Use: ~~XXX~~ Res Low
*click to view Zoning map *click to view FLU map

Ward #: ~~XXXX~~ 2 Neighborhood #: 12.02
*click to view Ward map *click to view Neighborhoods map

DESCRIPTION (REQUIRED)

Indicate Type of Special Use Request:
Special Use Special Use-Amendment Special Use - Dock

Provide a brief description of the propose land use activity: APPROXIMATELY 1,980 SQFT, SINGLE-FAMILY DOCKAGE WITH (2) TWO BOATLIFTS

MATERIALS FOR REVIEW (REQUIRED)

- **Special Use**
  - Special Use Application Fee: **$1,820**
  - Notarized Agent Authorization Form, if applicable
  - Letter of Request
  - Review Criteria (see page 2 for Special Use Review Criteria)
  - Twenty(20) copies of Site Plan to scale (see page 2 for Special Use Site Plan requirements)
  - Property Survey signed & sealed within the last 3 years
  - One (1) electronic copy in pdf format of Application and all required support materials
- **Special Use Permit - Amendment**
  - Special Use Amendment Application Fee: **$1,070**
  - Notarized Agent Authorization Form, if applicable
  - Letter of Request
  - Review Criteria (see page 2 for Special Use Amendment Review Criteria)
  - Twenty (20) copies of Site Plan to scale (see page 2 for Special Use Amendment Site Plan requirements)
  - Property Survey signed & sealed within the last 3 years
  - One (1) electronic copy in pdf format of Application and all required support materials
- **Special Use Permit - Dock**
  - ✓ Special Use Dock Application Fee: **$420**
  - ✓ Notarized Agent Authorization Form, if applicable
  - ✓ Letter of Request
  - Thirty (30) copies of Plot Plan to scale & One (1) electronic copy in pdf format of Application and all materials ✓
  - ✓ Property Survey signed & sealed within the last 3 years (2011)

RECEIVED NOV 07 2016 CITY OF BRADENTON PLANNING DEPT. AM 1 2 3 4 5 6 7 8 9 10 11 12 PM

CITY STAFF ONLY

Application Fees:
Fee Required: **$1,820** (Special Use)
$1,070 (Special Use-Amendment)
✓ **$420** (Special Use-Dock)

FEE COLLECTED: $ 420.00
RECEIPT #: 006939-0003

Application Sufficiency:
Sufficient: ☐
Incomplete: ☐

SU.

APPLICATION #: 162644

REVIEW DATES – TO BE COMPLETED BY CITY STAFF

CITY COUNCIL: 1/11/17
PLANNING COMMISSION: 12/21/16
DRC: 11/22/16

Agent Authorization Form

Department of Planning & Community Development
101 Old Main Street, Bradenton, FL 34205
Ph: (941) 932-9400
www.cityofbradenton.com

RECEIVED
NOV 07 2016
CITY OF BRADENTON
PLANNING DEPT.

PLANNING & ZONING AGENT AUTHORIZATION FORM

Property Address: 3404 Riverview Blvd, Bradenton, FL 34205

I, John M. Williams, the registered property owner(s) of the above noted property, do hereby authorize

Edward Newell — Wood Dock + Seawall
Print Name of Agent — Company Name

to act on my behalf and take all actions necessary for the processing, issuance and acceptance of this permit or certification and any and all standards and conditions applicable.

Signature of Owner(s) — Owner(s) Address (if different than property above)

Edward Newell — PO Box 489 Cortez FL 34215
Signature of Agent — Agent Address and Phone 941 792 5322

AGENT AUTHORIZATION

STATE OF FLORIDA, MANATEE COUNTY

The Foregoing instrument was acknowledged before me this 25th day of October.

produced personally known respectively, as

as identification and who did (did not) take an oath:

Signature

Andrea Olivero Notary Public
Print Name

State of Florida
My Commission Expires: 06/27/2020

Notary Public State of Florida
Andrea Olivero
My Commission FF 987640
Expires 06/27/2020

NOTARY

SU. 16. 4644

City of Bradenton, Florida
Permit Cashiers
101 Old Main Street
Bradenton, FL 34205-7865
(941) 932-9434
www.cityofbradenton.com

006939-0003 Cynthia P 11/07/2016 03:22PM

PERMITS / INSPECTIONS	
SPECIAL USE - REVIEW	
2016 Item: 164644|P100	420.00

	420.00
Subtotal	**420.00**
Total	**420.00**
CHECK	100.00
Check Number 021975	
CHECK	320.00
Check Number 021976	

Change due	**0.00**

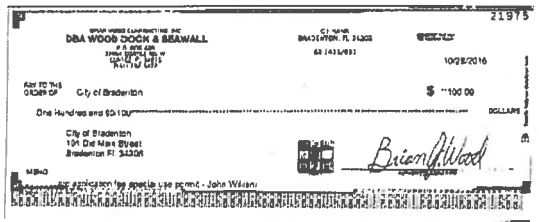
21975
DBA WOOD DOCK & SEAWALL
10/28/2016
City of Bradenton
$ **100.00
One Hundred and 00/100 DOLLARS
City of Bradenton
101 Old Main Street
Bradenton FL 34205
MEMO
Brian A. Wood

21976
DBA WOOD DOCK & SEAWALL
10/28/2016

PURCHASE PRICE $800,000.00
DOC TAX $5,600.00
RECORD $ 35.50

Prepared by and return to:
Terri Salt Costa, Esquire
Williams Parker Harrison Dietz & Getzen
200 South Orange Avenue
Sarasota, Florida 34236
(941) 366-4800

SPECIAL WARRANTY DEED

THIS INDENTURE made December 7th, 2011, by and between CB FLORIDA RRE HOLDINGS, LLC, a Florida limited liability company, hereinafter referred to as Grantor, whose post office address is 5310 E. SR 64, Bradenton, FL 34208, and JOHN M. WILLIAMS and JENNIFER WILLIAMS, husband and wife, hereinafter referred to as Grantee, whose post office address is 12715 Daisy Place, Bradenton, FL 34212.

WITNESSETH: Grantor, in consideration of the sum of ten dollars and other valuable considerations to it in hand paid by Grantee, receipt of which is hereby acknowledged, does hereby grant, bargain, sell and convey to Grantee, his heirs and assigns forever, the following described property situate in Manatee County, Florida:

Lot 1, Heather's Landing Subdivision, according to the map or plat thereof, as recorded in Plat Book 46, Page 102, of the Public Records of Manatee County, Florida.

Subject to restrictions, reservations, and easements of record; applicable governmental regulations; and taxes for the current year.

See attached corporate resolution for authority of signatory.

together with all appurtenances, privileges, rights, interests, dower, reversions, remainders and easements thereunto appertaining. Grantor warrants against only the lawful claims of all persons claiming by, through or under Grantor. As used herein, the terms "Grantor" and "Grantee" shall include their respective heirs, devisees, personal representatives, successors and assigns; any gender shall include all genders, the plural number the singular and the singular, the plural.

IN WITNESS WHEREOF, Grantor has caused this deed to be executed in its name by its undersigned duly authorized officer the date above written.

WITNESSES:

CB FLORIDA RRE HOLDINGS, LLC,
a Florida limited liability company

Witness Name: JAYNE COHEN

Witness Name: JUDITH M. MOGER

By: IB SPE Management Inc., a Delaware corporation
As its Manager

By: _____
Chris Dorn
As its Authorized Representative

(Corporate Seal)

STATE OF FLORIDA
COUNTY OF SARASOTA

The foregoing instrument was acknowledged before me this 14th day of December 2011 by Chris Dorn, as an Authorized Representative of IB SPE Management Inc., a Delaware corporation, the Manager of CB FLORIDA RRE HOLDINGS, LLC, a Florida limited liability company, on behalf of the corporation and the company. He is personally known to me or has produced a _____ as identification. If no identification is indicated, the above-named person is personally known to me.

Signature of Notary Public

Print Name of Notary Public

(Notary Seal)

JUDITH M. MOGER
Notary Public, State of Florida
My Comm. Expires Aug. 4, 2012
No. DD804902

I am a Notary Public of the State of Florida
and my commission expires on _____.

WRITTEN CONSENT TO ACTION IN LIEU OF A MEETING OF THE DIRECTORS OF IB SPE MANAGEMENT, INC.

Pursuant to the authority contained in Section 211 of the General Corporation Law of the State of Delaware, the adoption of the following resolutions is consented to by the undersigned, who are all of the Directors of IB SPE Management, Inc., a Delaware Corporation (the "Corporation"):

RESOLVED, that each of the persons identified below, be, and hereby is, authorized, empowered and directed to execute and deliver any and all documents and perform any and all acts that they, in their sole discretion deem necessary or appropriate for the following specific purpose, and with the specific authority:

(1) To enter into purchase and sale contracts and any related documents to transfer, convey, sell, transfer and/or exchange properties, immovable or movable, and their component parts, all on such terms and conditions as the authorized person deems proper;
(2) To execute and deliver limited warranty deeds related to the transfer, conveyance, sale, transfer and/or exchange of properties;
(3) Receive and provide receipts for the purchase price of any property, immovable or movable, sold; and
(4) Perform any other act or thing appropriate or necessary to carry out the purposes of these resolutions.

The persons designated, authorized, and empowered are as follows:

Dan Begley
Jason Block
Brian Buczko
Mark Collier
Chris Dorn
Amy Popma
Bruce Reid
Mary Rice
Neel Stacy
Wes Thompson

FURTHER RESOLVED, that any actions heretofore taken by any of the above named individuals in his or her capacity as an authorized person, as set forth above, be, and hereby are, ratified and confirmed as the authorized acts of the Corporation.

This instrument has been signed and the foregoing resolutions adopted and written consent to action effective as of the 26th day of May, 2011. This instrument shall be filed with the minutes of the proceedings of the directors of the Corporation.

DIRECTORS

Steven Kelley

Gregg Strader

Stephen Franklin

Prentice R. Jackson

WOOD DOCK & SEAWALL

"Building the best, repairing the rest'

Post Office Box 489, Cortez FL 34215

941-792-5322

RECEIVED
NOV 07 2016
CITY OF BRADENTON
PLANNING DEPT.

October 5, 2016

City of Bradenton

Department of Planning & Community Development

101 Old Main St.

Bradenton, FL 34205

Re: John Williams

3404 Riverview Blvd.

Bradenton, FL 34205

Permit#: 164263

This letter is to serve as a request to construct a 1,980 sqft dock, with two (2) boat lifts, as approved by The Department of Environmental Protection and The Army Corps of Engineers, for Mr. John Williams, at 3404 Riverview Blvd, Bradenton, FL 34205.

Kindest regards,

Brian J. Wood

Brian J. Wood

President

SU. 16. 4644

WOOD DOCK & SEAWALL

"Building the best, repairing the rest"

Post Office Box 489, Cortez FL 34215

941-792-5322

RECEIVED
NOV 21 2016
CITY OF BRADENTON
PLANNING DEPT.

October 18, 2016

City of Bradenton
Department of Planning & Community Development
101 Old Main St.
Bradenton, FL 34205

Re: John Williams
3404 Riverview Blvd.
Bradenton, FL 34205
Permit#: 164263

This letter is to serve as a request to construct a 1,980 sqft dock, with two (2) boat lifts, as approved by The Department of Environmental Protection and The Army Corps of Engineers, for Mr. John Williams, at 3404 Riverview Blvd, Bradenton, FL 34205.

Below are the detailed responses, addressing the Review Criteria, as per your request:

1. Adequacy of ingress and egress to property and proposed structures with particular regard for automobiles and pedestrian safety and convenience, traffic generation, flow and control and emergency access.

~Not applicable: Site is at the rear of private, waterfront property.

2. Location and design of off-street parking and loading areas in regard to the items in "1" above and the smoke, noise, glare, dust, vibrations, fumes, pollution and other effects of the use on adjoining properties

~ Not applicable: Site is at the rear of private, waterfront property.

3. Location and design of refuse and service areas in regard to availability, adequacy and effect upon surrounding properties.

~ Not applicable: Site is a single-family home. There will not be any refuse.

4. Utilities, in regard to location, availability, adequacy and compatibility with surrounding properties.

~ Included in the permitting process.

5. Screening, buffering or separation of any nuisance or hazardous feature of the use.

~ Not applicable.

6. Proposed signs and exterior lighting with reference to glare, traffic safety and compatibility and harmony with surrounding properties.

~ Not applicable: Property is a single-family dock.

7. Effect upon the value of surrounding properties; the use shall not hinder the development of nearby vacant properties or adversely affect their economic values.

~ The distance from land to the main channel is approximately 500' feet. The proposed dock reaches beyond adjacent existing docks and, in compliance with The Army Corps of Engineers Permit regulations, will not adversely affect the navigable waterway or boat traffic or either neighbor. Also, the proposed dock, being well-maintained, will increase this property value, as well as the surrounding properties' values.

8. Adequacy of land and /or building which are to be used.

~ In compliance with The Army Corps of Engineers and Department of Environmental Protection Permit requirements, the proposed dock (beginning at the seawall) will be elevated 3-3.5' above the MHW (beyond the Seagrasses) for 30', to then raise to 5' above the MHW for 385' and then to lower to 3-3.5' above MHW, for the remaining 60' of dockage.

9. General compatibility or appropriateness with adjacent properties and other property in the district with special consideration given to proposed hours of operation.

~ Surrounding waterfront properties and other existing docks are as long as this proposed dock, due to the conditions of the submerged lands.

10. Environmental quality of the district in which the use is proposed and the effect the Special Use Permit might have on such quality.

~ The marine grade pilings will be installed in such a way as to provide minimal impact to the environment, be sustainable and environmentally sound and will not adversely affect the submerged lands, sea grass, wildlife or other surrounding environment.

11. Consistency with the City of Bradenton Comprehensive Plan.

~ In compliance with The Army Corps of Engineers and Department of Environmental Protection Permit requirements and consistent with other existing docks, on similar properties, on the same waterbody, the proposed dock will fit in with the responsible use of coastal areas with The City of Bradenton's Comprehensive Plan.

RECEIVED
NOV 21 2016
CITY OF BRADENTON
PLANNING DEPT.

Kindest regards,

RECEIVED
NOV 21 2016
CITY OF BRADENTON
PLANNING DEPT.

Brian J. Wood

President/Owner

Wood Dock & Seawall

Florida Department of Environmental Protection

Southwest District Office
13051 North Telecom Parkway
Temple Terrace, FL 33637-0926

Rick Scott
Governor

Carlos Lopez-Cantera
Lt. Governor

Jonathan P. Steverson
Secretary

April 15, 2016

RECEIVED
NOV 07 2016
CITY OF BRADENTON
PLANNING DEPT.

Mr. John Williams
3404 Riverview Boulevard
Bradenton, FL 34205
John.Williams0915@gmail.com

File No. 41-0342327-001-EG, Manatee County

Dear Mr. Williams:

On March 10, 2016, we received your notice of intent to use a General Permit (GP), pursuant to Rule 62-330.427, Florida Administrative Code (F.A.C.) to construct an approximately 1,980-square-foot single-family dock with two associated boat lifts within Manatee River, a Class III Florida waterbody. The project is located at 3404 Riverview Boulevard, Bradenton, Section 28, Township 34 South, Range 17 East, Manatee County.

Your intent to use a general permit has been reviewed by Department staff for three types of authorizations: (1) regulatory authorization, (2) proprietary authorization (related to state-owned submerged lands), and (3) federal authorization. The authority for review and the outcomes of the reviews are listed below. Please read each section carefully.

Your project did not qualify for the federal authorization, therefore, additional authorization must be obtained prior to commencement of the proposed activity. This letter does not relieve you from the responsibility of obtaining other federal, state, or local authorizations that may be required for the activity. Please refer to the specific section(s) dealing with that portion of the review below for advice on how to proceed.

If you change the project from what you submitted, the authorization(s) granted may no longer be valid at the time of commencement of the project. Please contact us prior to beginning your project if you wish to make any changes.

1. Regulatory Review – Approved

Based on the forms, drawings, and documents submitted and revised with your notice, it appears that the project meets the requirements for the General Permit under Rule 62-330.427, F.A.C. Any activities performed under a general permit are subject to general conditions required in Rule 62-330.405, F.A.C. (attached), and the specific conditions of Rule 62-330.427, F.A.C. (attached). Any deviations from these conditions may subject the permittee to enforcement action and possible penalties.

SU. 16. 4644

Please be advised that the construction phase of the GP must be completed within five years from the date the notice to use the GP was received by the Department. If you wish to continue this GP beyond the expiration date, you must notify the Department at least 30 days before its expiration.

Authority for review- Part IV of Chapter 373, F.S., Title 62, F.A.C. and in accordance with the operating agreements executed between the Department and the water management districts, as referenced in Chapter 62-113, F.A.C.

2. Proprietary Review – Granted

The Department acts as staff to the Board of Trustees of the Internal Improvement Trust Fund (Board of Trustees) and issues certain authorizations for the use of sovereign submerged lands. The Department has the authority to review activities on sovereign submerged lands under Chapter 253 of the Florida Statutes (F.S.) and 258, F.S. if located within an aquatic preserve, and Chapters 18-20 and 18-21 of the Florida Administrative Code.

The activity appears to be located on sovereign submerged lands owned by the Board of Trustees. The activity is not exempt from the need to obtain the applicable proprietary authorization. As staff to the Board of Trustees, the Department has reviewed the activity described above, and has determined that the activity qualifies for a letter of consent under Section 253.77, Florida Statutes, to construct and use the activity on the specified sovereign submerged lands, as long as the work performed is located within the boundaries as described herein and is consistent with the terms and conditions herein.

During the term of this Letter of Consent you shall maintain satisfactory evidence of sufficient upland interest as required by paragraph 18-21.004(3)(b), Florida Administrative Code. If such interest is terminated or the Board of Trustees determines that such interest did not exist on the date of issuance of this Letter of Consent, this Letter of Consent may be terminated by the Board of Trustees at its sole option. If the Board of Trustees terminates this Letter of Consent, you agree not to assert a claim or defense against the Board of Trustees arising out of this Letter of Consent.

Please be advised that any use of sovereign submerged lands without specific prior authorization from the Board of Trustees will be considered a violation of Chapter 253, Florida Statutes and may subject the affected upland riparian property owners to legal action as well as potential fines for the prior unauthorized use of sovereign land.

Authority for review - Chapter 253 F.S., and Chapter 258, F. S., and Chapter 18-21, F.A.C., and Section 62-330.075, F.A.C. as required.

3. Federal Review - SPGP Not Approved

Your proposed activity as outlined on your notice and attached drawings **does not qualify** for Federal authorization pursuant to the State Programmatic General Permit and a **SEPARATE permit** or authorization **may be required** from the Corps. A copy of your permit application has been forwarded to the Corps for their review. The Corps will issue their authorization directly to you or contact you if additional information is needed. If you have not heard from the Corps within 30 days from the date your application was received at the local FDEP Office, contact the Corps at the Tampa Regulatory Field Office at (813) 769-7073, for status and further information. **Failure to obtain Corps authorization prior to construction could subject you to federal enforcement action by that agency.**

RECEIVED
NOV 07 2016
CITY OF BRADENTON
PLANNING DEPT.

Authority for review - an agreement with the USACOE entitled "Coordination Agreement Between the U. S. Army Corps of Engineers (Jacksonville District) and the Florida Department of Environmental Protection, or Duly Authorized Designee, State Programmatic General Permit," Section 10 of the Rivers and Harbor Act of 1899, and Section 404 of the Clean Water Act.

Additional Information

Please retain this general permit. The activities may be inspected by authorized state personnel in the future to ensure compliance with appropriate statutes and administrative codes. If the activities are not in compliance, you may be subject to penalties under Chapter 373, F.S., and Chapter 18-14, F.A.C.

NOTICE OF RIGHTS

This action is final and effective on the date filed with the Clerk of the Department unless a petition for an administrative hearing is timely filed under Sections 120.569 and 120.57, F.S., before the deadline for filing a petition. On the filing of a timely and sufficient petition, this action will not be final and effective until further order of the Department. Because the administrative hearing process is designed to formulate final agency action, the filing of a petition means that the Department's final action may be different from the position taken by it in this notice.

Petition for Administrative Hearing

A person whose substantial interests are affected by the Department's action may petition for an administrative proceeding (hearing) under sections 120.569 and 120.57, Florida Statutes. Pursuant to rule 28-106.201, Florida Administrative Code, a petition for an administrative hearing must contain the following information:

(a) The name and address of each agency affected and each agency's file or identification number, if known;

(b) The name, address, any email address, any facsimile number, and telephone number of the petitioner; the name, address, and telephone number of the petitioner's representative, if any, which shall be the address for service purposes during the course of the proceeding; and an explanation of how the petitioner's substantial interests are or will be affected by the agency determination;

(c) A statement of when and how the petitioner received notice of the agency decision;

(d) A statement of all disputed issues of material fact. If there are none, the petition must so indicate;

(e) A concise statement of the ultimate facts alleged, including the specific facts that the petitioner contends warrant reversal or modification of the agency's proposed action;

(f) A statement of the specific rules or statutes that the petitioner contends require reversal or modification of the agency's proposed action, including an explanation of how the alleged facts relate to the specific rules or statutes; and

(g) A statement of the relief sought by the petitioner, stating precisely the action that the petitioner wishes the agency to take with respect to the agency's proposed action.

The petition must be filed (received by the Clerk) in the Office of General Counsel of the Department at 3900 Commonwealth Boulevard, Mail Station 35, Tallahassee, Florida 32399-3000 or at Agency_Clerk@dep.state.fl.us. Also, a copy of the petition shall be mailed to the applicant at the address indicated above at the time of filing.

RECEIVED
NOV 07 2016
CITY OF BRADENTON
PLANNING DEPT

Time Period for Filing a Petition

In accordance with rule 62-110.106(3), Florida Administrative Code, petitions for an administrative hearing by the applicant must be filed within 21 days of receipt of this written notice. Petitions filed by any persons other than the applicant, and other than those entitled to written notice under section 120.60(3), Florida Statutes, must be filed within 21 days of publication of the notice or within 21 days of receipt of the written notice, whichever occurs first. Under section 120.60(3), Florida Statutes, however, any person who has asked the Department for notice of agency action may file a petition within 21 days of receipt of such notice, regardless of the date of publication. The failure to file a petition within the appropriate time period shall constitute a waiver of that person's right to request an administrative determination (hearing) under sections 120.569 and 120.57, Florida Statutes, or to intervene in this proceeding and participate as a party to it. Any subsequent intervention (in a proceeding initiated by another party) will be only at the discretion of the presiding officer upon the filing of a motion in compliance with rule 28-106.205, Florida Administrative Code.

Extension of Time

Under rule 62-110.106(4), Florida Administrative Code, a person whose substantial interests are affected by the Department's action may also request an extension of time to file a petition for an administrative hearing. The Department may, for good cause shown, grant the request for an extension of time. Requests for extension of time must be filed with the Office of General Counsel of the Department at 3900 Commonwealth Boulevard, Mail Station 35, Tallahassee, Florida 32399-3000, before the applicable deadline for filing a petition for an administrative hearing. A timely request for extension of time shall toll the running of the time period for filing a petition until the request is acted upon.

Mediation

Mediation is not available in this proceeding.

FLAWAC Review

The applicant, or any party within the meaning of Section 373.114(1)(a) or 373.4275, F.S., may also seek appellate review of this order before the Land and Water Adjudicatory Commission under Section 373.114(1) or 373.4275, F.S. Requests for review before the Land and Water Adjudicatory Commission must be filed with the Secretary of the Commission and served on the Department within 20 days from the date when the order is filed with the Clerk of the Department.

Judicial Review

Any party to this action has the right to seek judicial review pursuant to Section 120.68, F.S., by filing a Notice of Appeal pursuant to Rules 9.110 and 9.190, Florida Rules of Appellate Procedure, with the Clerk of the Department in the Office of General Counsel, 3900 Commonwealth Boulevard, M.S. 35, Tallahassee, Florida 32399-3000; and by filing a copy of the Notice of Appeal accompanied by the applicable filing fees with the appropriate District Court of Appeal. The Notice of Appeal must be filed within 30 days from the date this action is filed with the Clerk of the Department.

[THIS SECTION INTENTIONALLY LEFT BLANK]

RECEIVED
NOV 07 2016
CITY OF BRADENTON
PLANNING DEPT.

Executed in Hillsborough County, Florida.

STATE OF FLORIDA DEPARTMENT
OF ENVIRONMENTAL PROTECTION

Sincerely,

Lauren Greenfield

Lauren Greenfield
Environmental Manager
Permitting and Waste Cleanup Program
Southwest District

RECEIVED
NOV 07 2016
CITY OF BRADENTON
PLANNING DEPT

Enclosures:
Project drawings, 3 pages
Ch. 62-330.427, F.A.C.
General Conditions for All General Permits, Ch. 62-330.405, F.A.C.
General Consent Conditions for Use of Sovereignty Submerged Lands
Attachment "A" For Discretionary Publication

Copies furnished to:
U.S. Army Corps of Engineers, TampaReg@usace.army.mil
Mr. John McKenna, Contractor, John@floridapermitting.com

CERTIFICATE OF SERVICE

The undersigned duly designated deputy clerk hereby certifies that this determination, including all copies, was mailed before the close of business on April 15, 2016, to the above listed persons.

FILING AND ACKNOWLEDGMENT

FILED, on this date, pursuant to 120.52(7),
Florida Statutes, with the designated Department Clerk,
receipt of which is hereby acknowledged.

Clerk Rhonda Hughes Date April 15, 2016

DEPARTMENT OF THE ARMY
JACKSONVILLE DISTRICT CORPS OF ENGINEERS
10117 PRINCESS PALM AVE, SUITE 120
TAMPA, FLORIDA 33610-8302

RECEIVED
NOV 07 2016
CITY OF BRADENTON
PLANNING DEPT.

5 October 2016

REPLY TO ATTENTION OF

Regulatory Division
West Branch
Tampa Permits Section
SAJ-2016-00902 (GP-EWG)

Mr. John Williams
3404 Riverview Blvd
Bradenton, FL 34205-2630

Dear Mr. Williams:

Your Department of the Army application has been assigned permit number SAJ-2016-00902. A review of the information and drawings provided shows the proposed work is to construct a construct a 1,980-square-foot single-family dock with two associated boat lifts. The project is located adjacent to the Manatee River at 3404 Riverview Boulevard, Section 6, Township 35 south, Range 17 east, Bradenton, Manatee County, Florida. Latitude: 27.502000° and Longitude: -82.596029°

Your project, as depicted on the enclosed drawings, is authorized by Regional General Permit (GP) SAJ-20. This authorization is valid until **March 22, 2018**. Please access the Corps' Regulatory webpage to view the special and general conditions for SAJ-20, which apply specifically to this authorization. The website address is as follows:

http://www.saj.usace.army.mil/Missions/Regulatory/SourceBook.aspx

Please be aware this web address is case sensitive and should be entered as it appears above. Once there you will need to click on "General Permits." Then you can click on the specific SAJ permit. You must comply with all of the special and general conditions and any project-specific conditions of this authorization or you may be subject to enforcement action. The following project-specific conditions are included with this authorization:

1. **Reporting Address:** The Permittee shall submit all reports, documentation and correspondence required by the conditions of this permit to the following address: CESAJ-ComplyDocs@usace.army.mil. The Permittee shall reference this permit number, SAJ-2016-00902 (GP-EWG), on all submittals.

Su. 16. 4644

RECEIVED
NOV 07 2016
CITY OF BRADENTON
PLANNING DEPT

2. **Commencement Notification:** Within 10 days from the date of initiating the authorized work, the Permittee shall provide to the Corps a written notification of the date of commencement of work authorized by this permit.

3. **Self-Certification:** Within 60 days of completion of the authorized work or at the expiration of the construction authorization of this permit, whichever occurs first, the Permittee shall complete the attached "Self-Certification Statement of Compliance" form and submit to the Corps. In the event that the completed work deviates, in any manner, from the authorized work, the Permittee shall describe, on the Self-Certification Form, the deviations between the work authorized by the permit and the work as constructed. Please note that the description of any deviations on the Self-Certification Form does not constitute approval of any deviations by the Corps.

4. **Manatee Conditions:** The Permittee shall comply with the "Standard Manatee Conditions for In-Water Work – 2011" provided as an attachment to this permit.

5. **Sea Turtle and Smalltooth Sawfish Conditions:** The Permittee shall comply with National Marine Fisheries Service's "Sea Turtle and Smalltooth Sawfish Construction Conditions" dated March 23, 2006 and provided as an attachment to this permit.

6. **Dock Construction Guidelines:** The Permittee shall comply with the "Dock Construction Guidelines in Florida for Docks or Other Minor Structures Constructed in or over Submerged Aquatic Vegetation, Marsh or Mangrove Habitat – U.S. Army Corps of Engineers/National Marine Fisheries Service – August 2001" provided as an attachment to this permit.

7. **Turbidity Barriers:** Prior to the initiation of any of the work authorized by this permit the Permittee shall install floating turbidity barriers with weighted skirts that extend to within one foot of the bottom around all work areas that are in, or adjacent to, surface waters. The turbidity barriers shall remain in place and be maintained until the authorized work has been completed and all erodible materials have been stabilized.

8. **Notice of Authorization:** The Permittee shall complete and record the "Notice of Department of the Army Authorization" form (attached) with the Clerk of the Circuit Court, Registrar of Deeds or other appropriate official charged with the responsibility of maintaining records of title to or interest in real property within the county of the authorized activity. Within 90 days from the effective date of this permit, the Permittee shall provide a copy of the recorded Notice of Permit to the Corps clearly showing a stamp from the appropriate official indicating the book and page at which the Notice of Permit is recorded and the date of recording.

RECEIVED
NOV 07 2016
CITY OF BRADENTON
PLANNING DEPT.

9. **Posting of Permit:** The Permittee shall have available and maintain for review a copy of this permit and approved plans at the construction site.

10. **Regulatory Agency Changes:** Should any other agency require and/or approve changes to the work authorized or obligated by this permit, the Permittee is advised a modification to this permit instrument is required prior to initiation of those changes. It is the Permittee's responsibility to request a modification of this permit from the Tampa Permits Section. The Corps reserves the right to fully evaluate, amend, and approve or deny the request for modification of this permit.

11. **Cultural Resources / Historic Properties:** No structure or work shall adversely affect impact or disturb properties listed in the National Register of Historic Places (NRHP) or those eligible for inclusion in the NRHP. If during the ground disturbing activities and construction work within the permit area, there are archaeological/cultural materials encountered which were not the subject of a previous cultural resources assessment survey (and which shall include, but not be limited to: pottery, modified shell, flora, fauna, human remains, ceramics, stone tools or metal implements, dugout canoes, evidence of structures or any other physical remains that could be associated with Native American cultures or early colonial or American settlement), the Permittee shall immediately stop all work and ground-disturbing activities within a 100-meter diameter of the discovery and notify the Corps within the same business day (8 hours). The Corps shall then notify the Florida State Historic Preservation Officer (SHPO) and the appropriate Tribal Historic Preservation Officer(s) (THPO(s)) to assess the significance of the discovery and devise appropriate actions.

12. **Assurance of Navigation and Maintenance:** The Permittee understands and agrees that, if future operations by the United States require the removal, relocation, or other alteration, of the structures or work herein authorized, or if, in the opinion of the Secretary of the Army or his authorized representative, said structure or work shall cause unreasonable obstruction to the free navigation of the navigable waters, the Permittee will be required, upon due notice from the U.S. Army Corps of Engineers, to remove, relocate, or alter the structural work or obstructions caused thereby, without expense to the United States. No claim shall be made against the United States on account of any such removal or alteration.

This authorization does not obviate the necessity to obtain any other Federal, State, or local permits, which may be required. Prior to the initiation of any construction, projects qualifying for this Regional General permit must qualify for an exemption under section 403.813(1), F.S. or 373.406, F.S., or otherwise be authorized by the applicable permit required under Part IV of Chapter 373, F.S., by the Department of Environmental Protection, a water management district under section 373.069, F.S., or a local government with delegated authority under section 373.441, F.S., and receive Water

RECEIVED
NOV 07 2016
CITY OF BRADENTON
PLANNING DEPT

Quality Certification (WQC) and applicable Coastal Zone Consistency Concurrence (CZCC) or waiver thereto, as well as any authorizations required for the use of state-owned submerged lands under Chapter 253, F.S., and, as applicable, Chapter 258, F.S. You should check State-permitting requirements with the Florida Department of Environmental Protection or the appropriate water management district.

This authorization does not include conditions that would prevent the 'take' of a state-listed fish or wildlife species. These species are protected under sec. 379.411, Florida Statutes, and listed under Rule 68A-27, Florida Administrative Code. With regard to fish and wildlife species designated as species of special concern or threatened by the State of Florida, you are responsible for coordinating directly with the Florida Fish and Wildlife Conservation Commission (FWC). Permittees can visit the FWC license and permitting webpage (http://www.myfwc.com/license/wildlife) for more information, including a list of those fish and wildlife species designated as species of special concern or threatened. The Florida Natural Areas Inventory (http://www.fnai.org) also maintains updated lists, by county, of documented occurrences of those species.

If you are unable to access the internet or require a hardcopy of any of the conditions, limitations, or expiration date for the above referenced GP, please contact Edgar W. Garcia by telephone at 813-769-7062 or electronic mail at Edgar.W.Garcia@usace.army.mil.

Thank you for your cooperation with our permit program. The Corps Jacksonville District Regulatory Division is committed to improving service to our customers. We strive to perform our duty in a friendly and timely manner while working to preserve our environment. We invite you to visit http://corpsmapu.usace.army.mil/cm_apex/f?p=regulatory_survey and complete our automated Customer Service Survey. Your input is appreciated – favorable or otherwise. Again, please be aware this Internet address is case sensitive and should be entered as it appears above.

Sincerely,

GARCIA.EDGAR.W.1182390042

Digitally signed by GARCIA.EDGAR.W.1182390042
DN: c=US, o=U.S. Government, ou=DoD, ou=PKI, ou=USA, cn=GARCIA.EDGAR.W.1182390042
Date: 2016.10.05 14:45:20 -04'00'

Edgar W. Garcia
Project Manager

Enclosures
Copy/ies Furnished:
CESAJ-RD-PE

RIVERS AND HARBORS ACT SECTION 10 DETERMINATION OF JURISDICTION

RECEIVED
NOV 22 2016
CITY OF BRADENTON
PLANNING DEPT.

Project Name: WILLIAMS, JOHN / DOCK AND LIFTS

Action ID: SAJ-2016-00902

Applicant:

Mr. John Williams
3404 Riverview Blvd
Bradenton, FL 34205-2630

There are "navigable waters of the U.S." within Rivers and Harbors Act (RHA) jurisdiction (as defined by 33 CFR part 329) in the review area.

Waterbody: Manatee River.

Waters have been determined to be navigable because:

- ☐ Navigation Study
- ☐ Judicial interpretation in a Federal court of law
- ☒ Waters subject to the ebb and flow of the tide
- ☐ Waters are presently used, or have been used in the past, or may be susceptible for use to transport interstate or foreign commerce. **Explain**:

Project Manager: Edgar W. Garcia
Date: 05 Oct 2016

Project Location: Manatee River

The project is located adjacent to the Manatee River at 3404 Riverview Boulevard, Section 6, Township 35 south, Range 17 east, Bradenton, Manatee County, Florida. Latitude: 27.502000°, Longitude: 82.596029°.

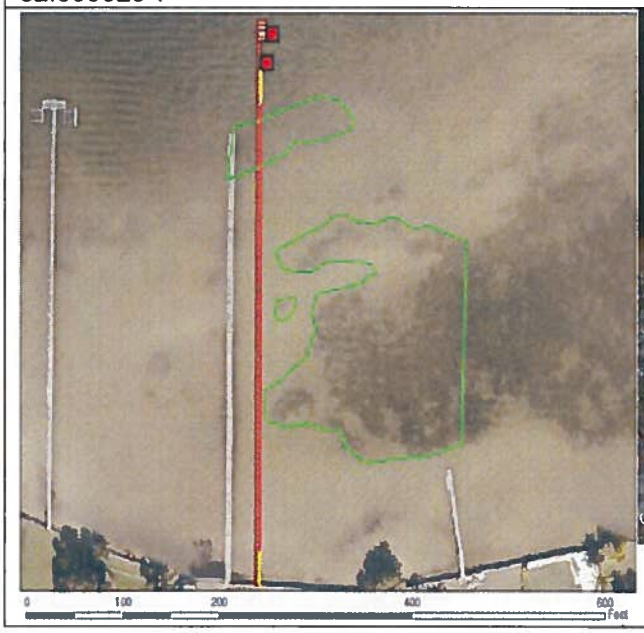

Proposed Condition Plan View

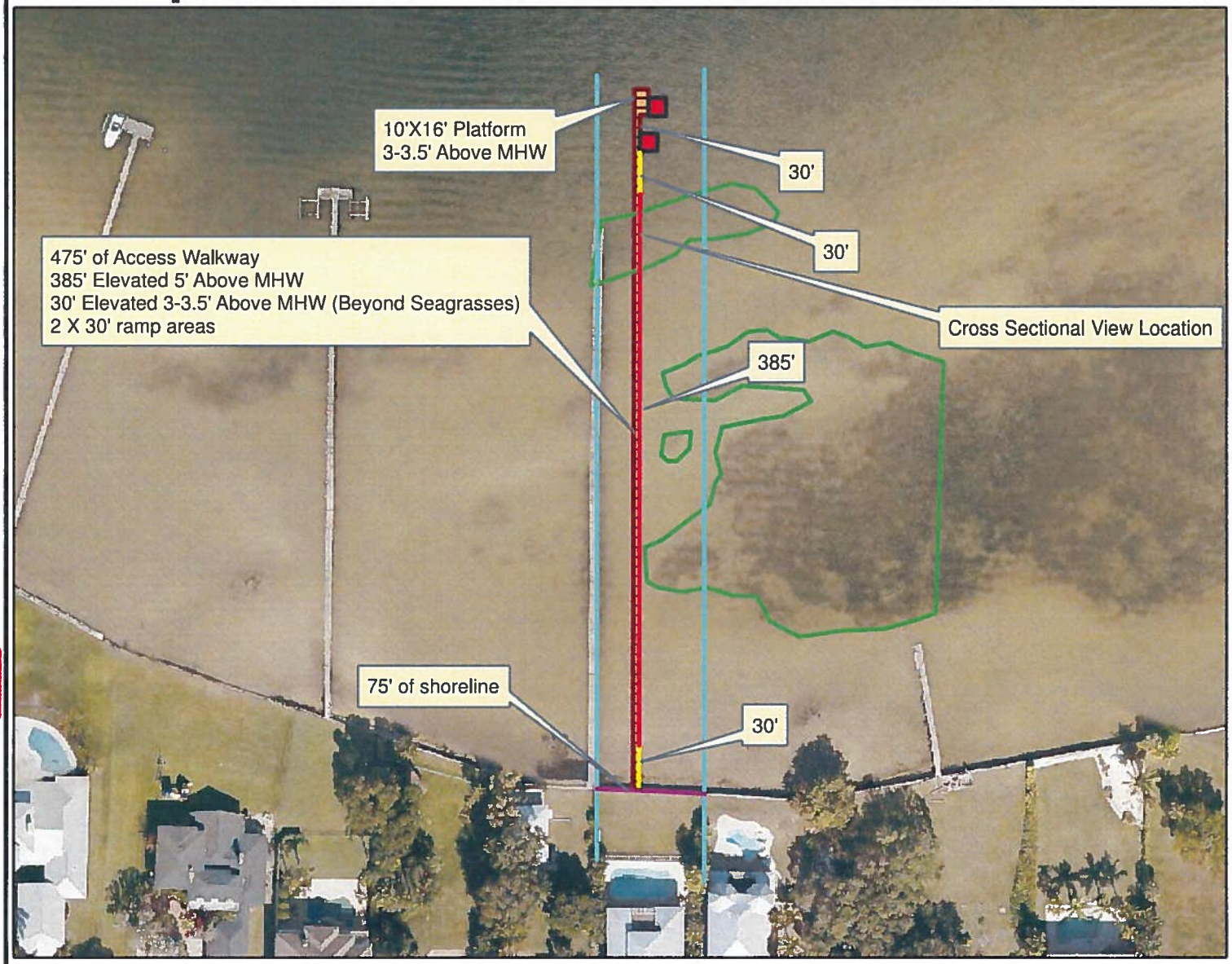

0 100 200 400 600 800 Feet

Mr. John Williams
Riverview Blvd.
Manatee County, FL
S/T/R = 27/34/17

- Existing Seawall
- Riparian Lines
- Elevated Deck
- Dock Ramp Up
- Sea Grass
- Boatlifts
- Dock

N W E S

Sea Grass Survey
Performed 4/12/16

RECEIVED
NOV 22 2016
CITY OF BRADENTON
PLANNING DEPT

Florida Permitting, Inc.
Consulting Environmental Scientists
Palmetto, FL 34221

U.S. ARMY CORPS OF ENGINEERS
PERMIT NUMBER: SAJ-2016-00902
DRAWING 1 OF 4
10/2016

Proposed Cross Section

Williams Property
S/T/R: 6/35S/17E
Manatee County, FL 34205

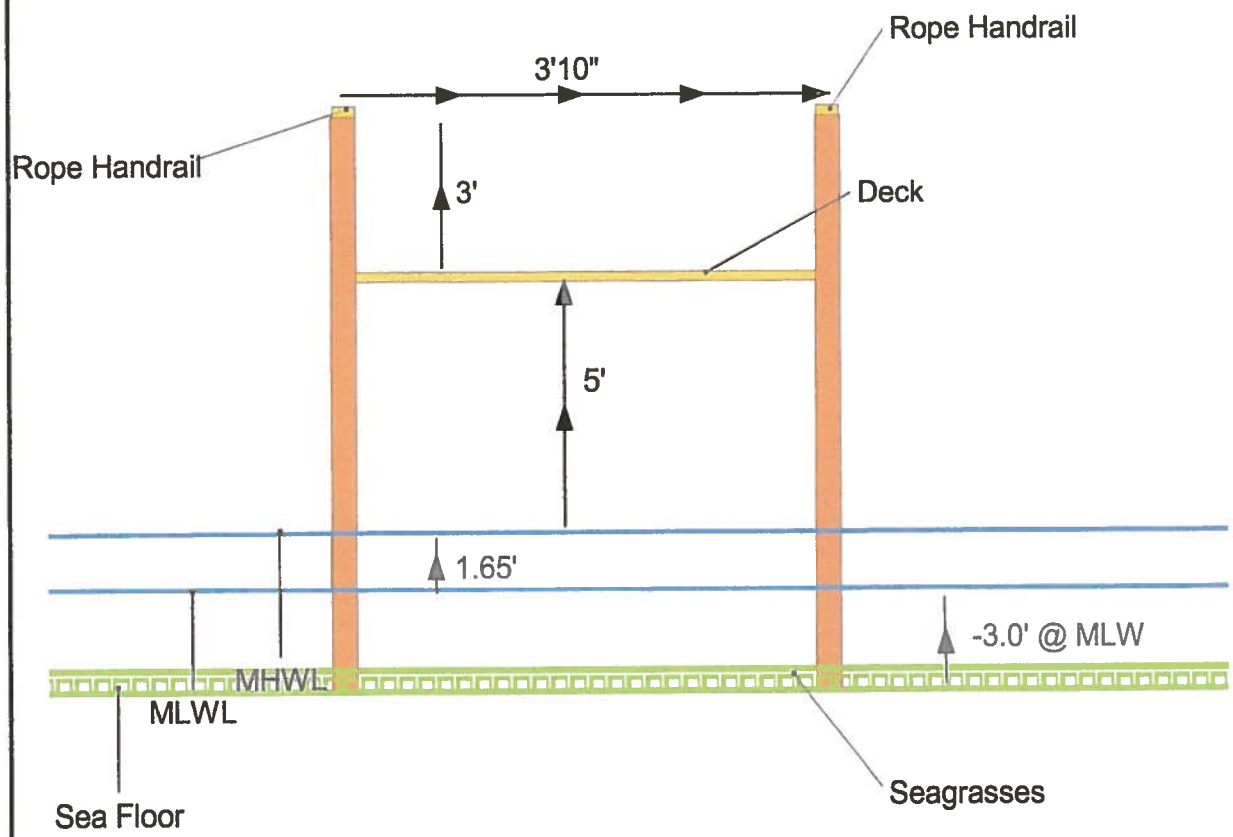

"Not to Scale"

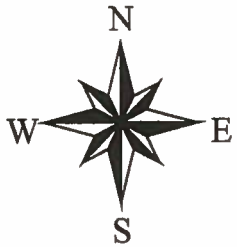

RECEIVED
NOV 07 2016
CITY OF BRADENTON
PLANNING DEPT.

Florida Permitting, Inc.
Consulting Environmental Scientists
Palmetto, FL 34221

U.S. ARMY CORPS OF ENGINEERS
PERMIT NUMBER: SAJ-2016-00902
DRAWING 3 OF 4
10/2016

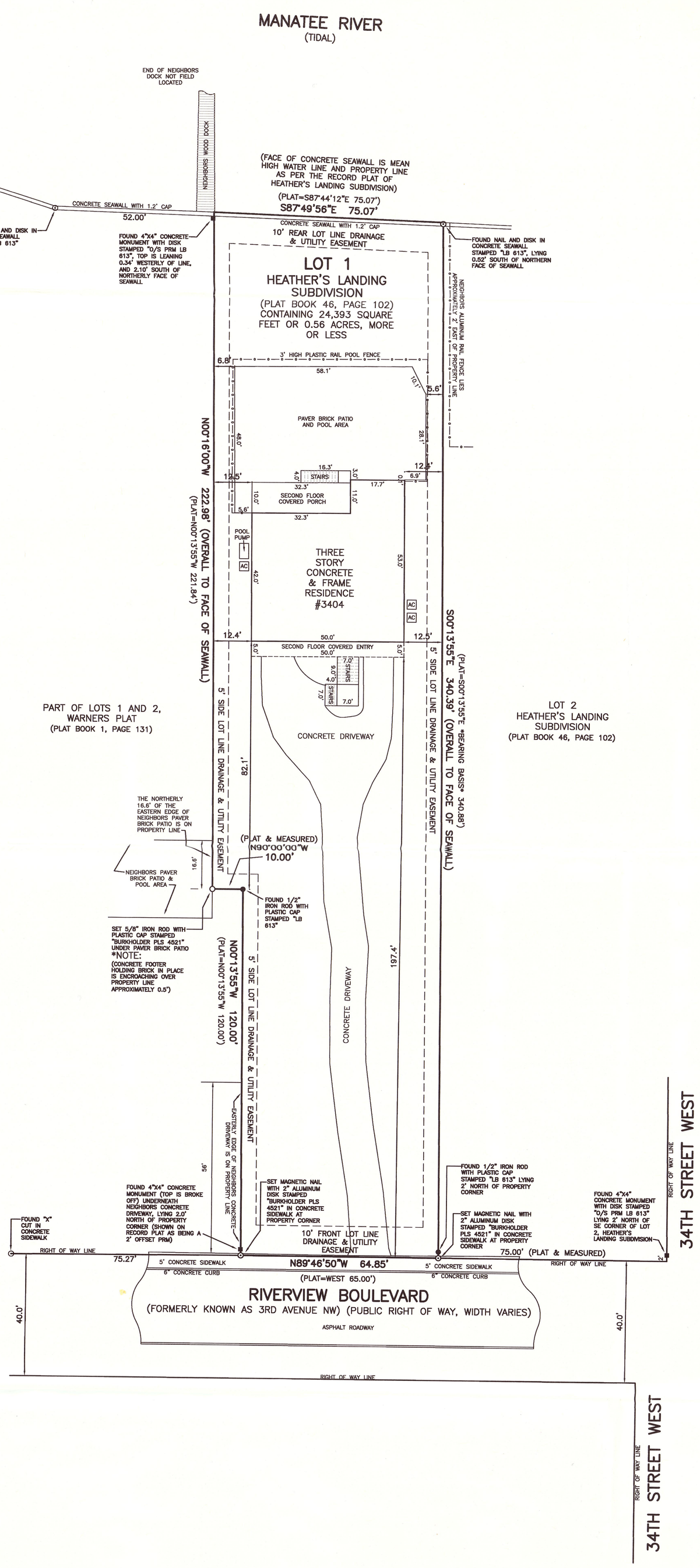

LEGAL DESCRIPTION

(AS FURNISHED)
LOT 1, HEATHER'S LANDING SUBDIVISION, RECORDED IN PLAT BOOK 46, PAGE 102, PUBLIC RECORDS OF MANATEE COUNTY, FLORIDA;

SUBJECT TO EASEMENTS, RESTRICTIONS, RESERVATIONS, AND/OR RIGHTS OF WAY OF RECORD, IF ANY.

SURVEYOR'S REPORT

(DATE OF FIELD SURVEY: 11/30/2011, FIELD BOOK 12, PAGES 1 AND 2)

I HEREBY CERTIFY TO:

- **JOHN M. WILLIAMS;**
- **JENNIFER WILLIAMS;**
- **WILLIAMS PARKER HARRISON DIETZ & GETZEN;**
- **CHICAGO TITLE INSURANCE COMPANY;**

THAT:

I AM A PROFESSIONAL SURVEYOR AND MAPPER REGISTERED IN THE STATE OF FLORIDA, HOLDING CERTIFICATE NO. 4521, AND THAT I AM ACTING ON BEHALF OF BURKHOLDER LAND SURVEYING, INC.., A CORPORATION AUTHORIZED TO OFFER SERVICES OF REGISTERED LAND SURVEYORS AND MAPPERS IN THE STATE OF FLORIDA, HOLDING L.B. NO. 7675;

THIS BOUNDARY REPRESENTS A FIELD SURVEY PERFORMED UNDER MY SUPERVISION OF THE LAND SHOWN AND DESCRIBED HEREON;

THIS SURVEY WAS PREPARED WITHOUT THE BENEFIT OF A CURRENT TITLE REPORT AND THEREFORE MAY NOT INDICATE ALL ENCUMBRANCES AFFECTING SUBJECT PROPERTY;

THE LOCATION OF TREES, UTILITIES, OR ANY OTHER PERTINENT ATTRIBUTES AFFECTING SUBJECT PROPERTY NOT ABSTRACTED AS PART OF THIS SURVEY EXCEPT AS SHOWN;

BEARINGS SHOWN HEREON ARE BASED ON THE RECORD PLAT. A BEARING OF S00°13'55"E FOR THE EAST LINE OF LOT 1 WAS USED;

PORTIONS OF THE SUBJECT PROPERTY ARE SITUATED IN FLOOD ZONE "C", FLOOD ZONE "B", AND FLOOD ZONE "A8" (ELEVATION 8') PER F.E.M.A. FLOOD INSURANCE RATE MAP 120153 0326 B. (MAP REVISED NOVEMBER 16TH, 1983). THE EXISTING RESIDENCE ON THE SUBJECT PROPERTY APPEARS TO LIE WITHIN FLOOD ZONE "B", WITH FLOOD ZONE "A8" BEING NORTH OF THE SHORELINE (SEAWALL) OF THE MANATEE RIVER. ACTUAL FLOOD ZONE DETERMINATION AND THE LOCATIONS OF THE FLOOD ZONE LINES AS THEY RELATE TO THE SUBJECT PROPERTY, WERE NOT ABSTRACTED OR INCLUDED AS PART OF THIS SURVEY;

ELEVATIONS WERE NOT INCLUDED AS PART OF THIS SURVEY;

A TIDE STUDY TO DETERMINE THE LOCATION AND/OR ELEVATION OF THE MEAN HIGH WATER LINE WERE NOT ABSTRACTED AS PART OF THIS SURVEY; THE FACE OF THE EXISTING SEAWALL IS THE LOCATION OF THE MEAN HIGH WATER LINE AS NOTED AND SO SHOWN ON THE RECORD PLAT OF HEATHER'S LANDING SUBDIVISION;

THIS SURVEY MEETS THE MINIMUM TECHNICAL STANDARDS FOR SURVEYING IN THE STATE OF FLORIDA, AS SET FORTH BY THE FLORIDA BOARD OF LAND SURVEYORS, RULE NO. 5J-17, FLORIDA ADMINISTRATIVE CODE, PURSUANT TO SECTION 472.027 OF THE FLORIDA STATUTES.

BURKHOLDER LAND SURVEYING, INC..
LB NO. 7675

BY: 12/05/11

STEVEN E. BURKHOLDER, P.L.S., PRESIDENT
PROFESSIONAL LAND SURVEYOR
FLORIDA CERTIFICATE LS 4521

(NOT VALID UNLESS SIGNED IN INK WITH EMBOSSED SEAL AFFIXED HERETO)

© COPYRIGHT 2011, BURKHOLDER LAND SURVEYING, INC..

NOTICE: *THIS DRAWING IS THE PROPERTY OF BURKHOLDER LAND SURVEYING, INC.. AND IS NOT TO BE REPRODUCED IN WHOLE OR IN PART. IT IS NOT TO BE USED ON ANY OTHER PROJECT OR RELIED UPON BY ANY OTHER PARTY OTHER THAN THOSE WHOM THIS SURVEY WAS CERTIFIED TO, AND IS TO BE RETURNED TO BURKHOLDER LAND SURVEYING, INC.. UPON REQUEST.*

RECEIVED NOV 07 2016 CITY OF BRADENTON PLANNING DEPT.

STEVEN E. BURKHOLDER CERTIFICATE NO. 4521 STATE OF FLORIDA REGISTERED LAND SURVEYOR

Su. 16. 4644

SHEET 1 OF 1

PREPARED FOR:
JOHN & JENNIFER WILLIAMS

3404 RIVERVIEW BOULEVARD
BRADENTON, FLORIDA 34205

BOUNDARY SURVEY
BLS PROJECT #11-30-11
IN SECTION 28, TOWNSHIP 34 SOUTH, RANGE 17 EAST, MANATEE COUNTY, FLORIDA.
© COPYRIGHT 2011 BURKHOLDER LAND SURVEYING, INC..

NOTES & REVISIONS

BURKHOLDER LAND SURVEYING, INC..
7116 6th Avenue NW, Bradenton, Florida 34209
PHONE: 941-209-9712 (L.B. NO. 7675)

WOOD DOCK AND SEAWALL

ADDRESS 12044 CORTEZ RD W CORTEZ, FL 34215 / MAILING ADDRESS P/O BOX 489 CORTEZ FL 34215
Bradenton # 941-792-5322 / Sarasota # 941-952-0200
E mail: wooddockandseawall@msn.com

Site plan for dock boatlift and jetski lift

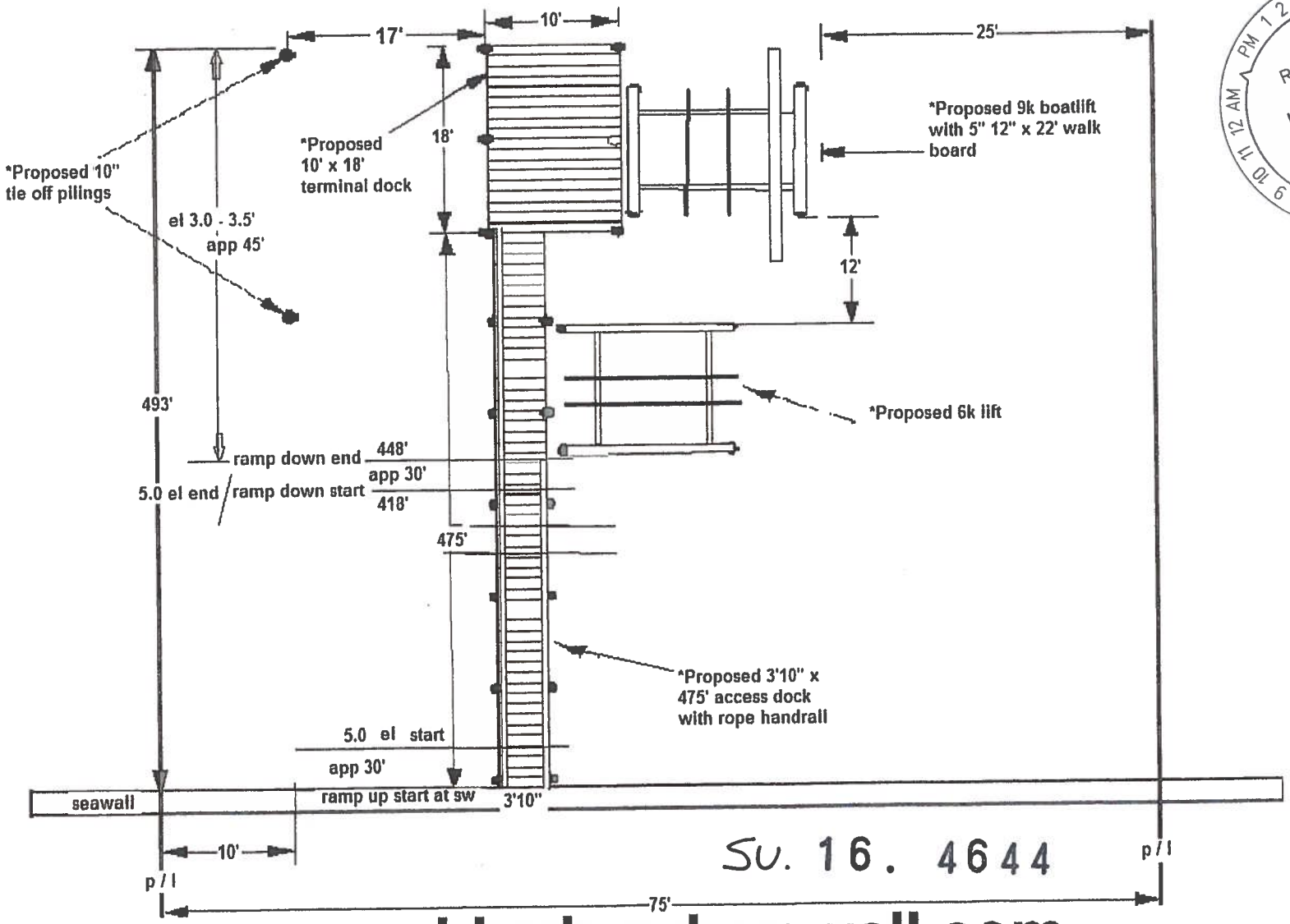

RECEIVED
NOV 07 2016
CITY OF BRADENTON
PLANNING DEPT.

Su. 16. 4644

wooddockandseawall.com

U.S. ARMY CORPS OF ENGINEERS
PERMIT NUMBER: SAJ-2016-00902
DRAWING 2 OF 4 10/2016

WOOD DOCK AND SEAWALL

ADDRESS 12044 CORTEZ RD W CORTEZ, FL 34215 / MAILING ADDRESS P/O BOX 489 CORTEZ FL 34215
Bradenton # 941-792-5322 / Sarasota # 941-952-0200
E mail: wooddockandseawall@msn.com

N

WILLIAMS DOCK ELEVATIONS

RECEIVED
NOV 07 2016
CITY OF BRADENTON
PLANNING DEPT

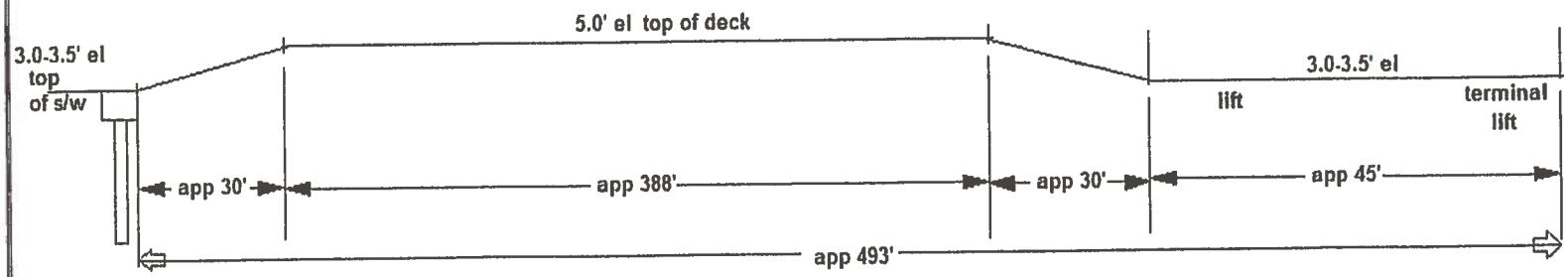

Su. 16. 4644

wooddockandseawall.com

U.S. ARMY CORPS OF ENGINEERS
PERMIT NUMBER: SAJ-2016-00902
DRAWING 4 OF 4
10/2016

ADDRESS 12044 CORTEZ RD W CORTEZ, FL 34215 / MAILING ADDRESS P/O BOX 489 CORTEZ FL 34215
Bradenton # 941-792-5322 / Sarasota # 941-952-0200
E mail: wooddockandseawall@msn.com

BOAT LIFT CROSS SECTION

RECEIVED
NOV 07 2016
CITY OF BRADENTON
PLANNING DEPT.

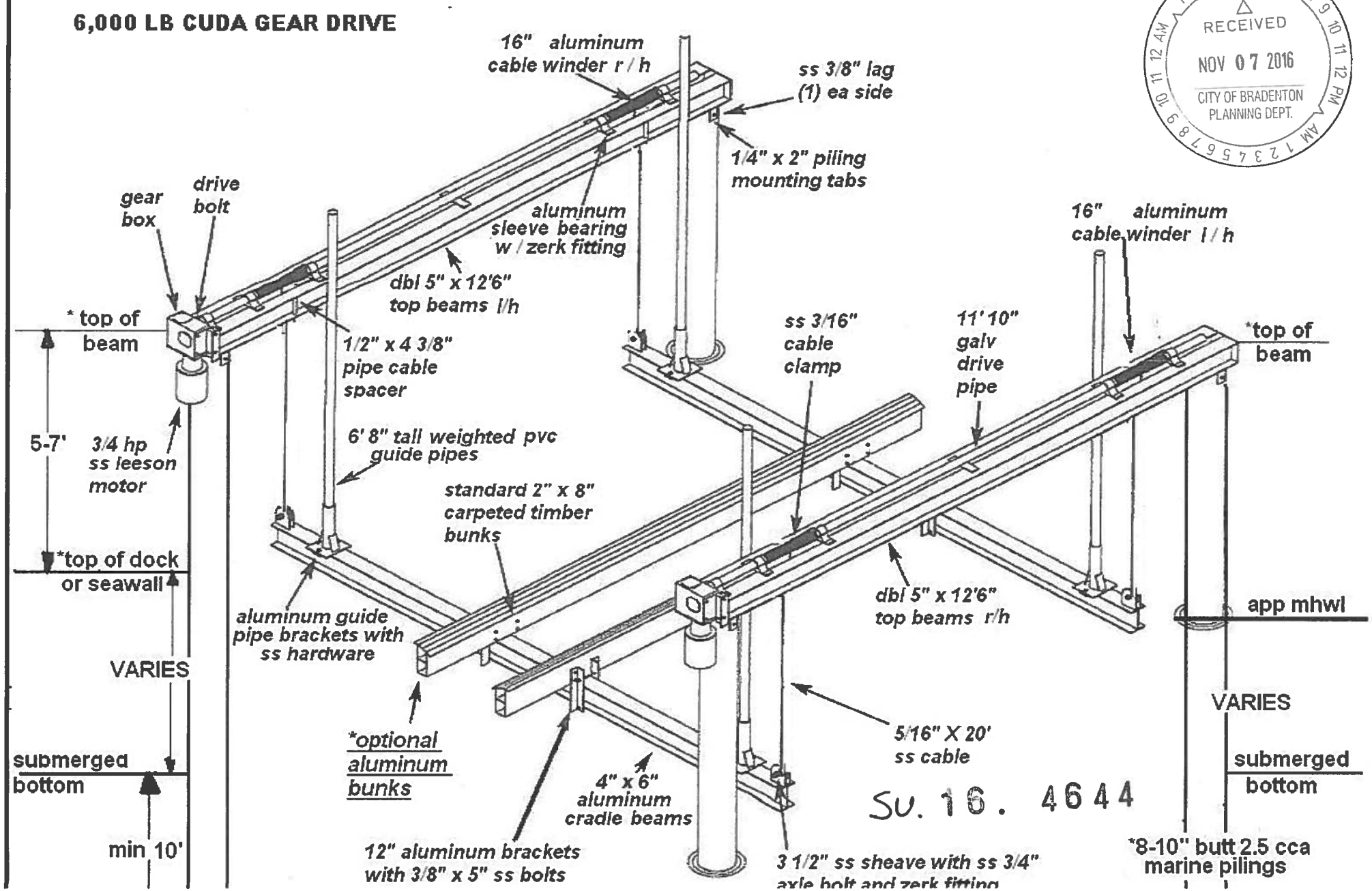

Su. 16. 4644

Bradenton # 941-792-5322 / Sarasota # 941-952-0200
E mail: wooddockandseawall@msn.com

TRANSVERSE CROSS SECTION

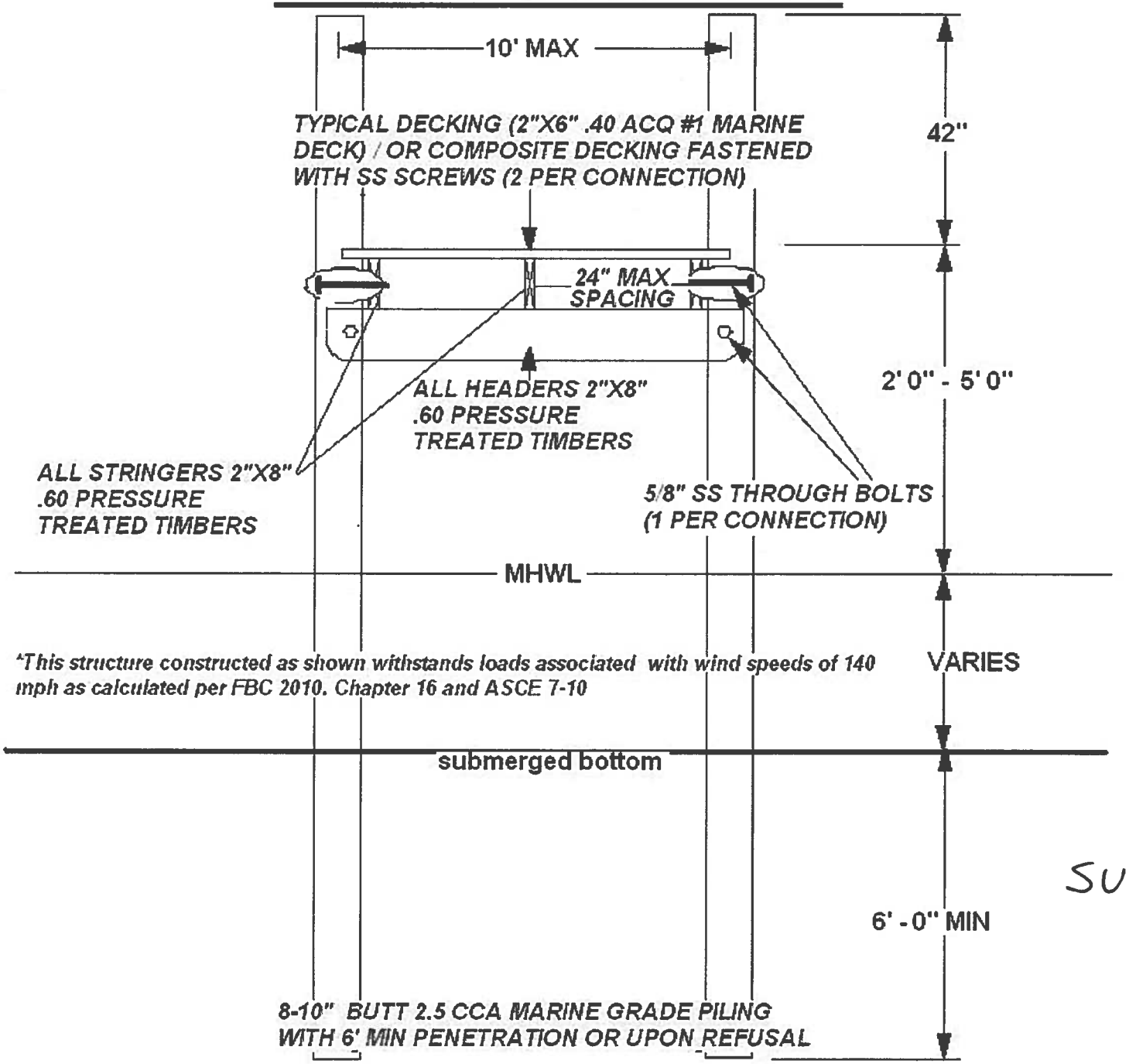

*This structure constructed as shown withstands loads associated with wind speeds of 140 mph as calculated per FBC 2010. Chapter 16 and ASCE 7-10

RECEIVED
NOV 07 2016
CITY OF BRADENTON
PLANNING DEPT.

SU. 16. 4644